GROUP 90

CIRCUIT DIAGRAMS

CONTENTS

HOW TO READ CIRCUIT DIAGRAMS 90-4

JUNCTION BLOCK 90-10

JOINT CONNECTOR 90-12

CENTRALIZED JUNCTION 90-16

POWER DISTRIBUTION SYSTEM . . 90-22

STARTING SYSTEM 90-26

IGNITION SYSTEM 90-27

CHARGING SYSTEM 90-28

MFI SYSTEM 90-30

INVECS-II 4A/T 90-40

HEADLIGHT <VEHICLES FOR USA> 90-50

HEADLIGHT <VEHICLES FOR CANADA> 90-52

TAILLIGHT, POSITION LIGHT AND LICENSE PLATE LIGHT 90-56

FOG LIGHT 90-58

DOME LIGHT, MAP LIGHT AND CARGO SPACE LIGHT <VEHICLES WITHOUT KEYLESS ENTRY SYSTEM> 90-60

DOME LIGHT, MAP LIGHT AND CARGO SPACE LIGHT <VEHICLES WITH KEYLESS ENTRY SYSTEM> 90-62

DOOR LIGHT 90-65

IGNITION KEY HOLE ILLUMINATION LIGHT 90-66

VANITY MIRROR LIGHT 90-67

GLOVE BOX LIGHT 90-68

TURN-SIGNAL LIGHT AND HAZARD WARNING LIGHT <VEHICLES WITHOUT KEYLESS ENTRY SYSTEM> 90-70

TURN-SIGNAL LIGHT AND HAZARD WARNING LIGHT <VEHICLES WITH KEYLESS ENTRY SYSTEM> 90-72

STOPLIGHT 90-74

BACKUP LIGHT 90-76

HORN 90-77

METER AND GAUGE 90-78

COMPASS AND TEMPERATURE DISPLAY 90-80

Continued on next page

FUEL WARNING LIGHT, OIL PRESSURE WARNING LIGHT, BRAKE WARNING LIGHT, SEAT BELT WARNING LIGHT 90-82

POWER WINDOWS <VEHICLES WITHOUT KEYLESS ENTRY SYSTEM> 90-84

POWER WINDOWS <VEHICLES WITH KEYLESS ENTRY SYSTEM> 90-88

CENTRAL DOOR LOCKING SYSTEM <VEHICLES WITHOUT KEYLESS ENTRY SYSTEM> 90-94

CENTRAL DOOR LOCKING SYSTEM <VEHICLES WITH KEYLESS ENTRY SYSTEM> 90-98

HEATER 90-110

AIR CONDITIONING SYSTEM 90-112

REAR HEATER 90-118

WINDSHIELD WIPER AND WASHER 90-121

REAR WIPER AND WASHER 90-122

REAR WINDOW DEFOGGER AND DOOR MIRROR HEATER 90-124

REMOTE CONTROLLED MIRROR . . 90-127

AUTO-DIMMING MIRROR 90-128

RADIO, TAPE PLAYER AND CD PLAYER <VEHICLES WITHOUT AMPLIFIER> 90-130

RADIO, TAPE PLAYER AND CD PLAYER <VEHICLES WITH AMPLIFIER> 90-132

CLOCK 90-135

CIGARETTE LIGHTER 90-136

ACCESSORY SOCKET 90-137

SUNROOF 90-138

LIGHTING MONITOR TONE ALARM 90-142

KEY REMINDER TONE ALARM 90-143

SEAT BELT TONE ALARM 90-144

RHEOSTAT 90-145

AUTO-CRUISE CONTROL SYSTEM . 90-146

FULL TIME 4WD SYSTEM 90-152

ANTI-LOCK BRAKING SYSTEM (ABS) <RWD> 90-154

ANTI-LOCK BRAKING SYSTEM (ABS) <4WD> 90-158

SUPPLEMENTAL RESTRAINT SYSTEM (SRS) 90-162

HEATED SEAT 90-164

THEFT-ALARM SYSTEM 90-166

IMMOBILIZER SYSTEM 90-174

NOTES

HOW TO READ CIRCUIT DIAGRAMS

M1901000100447

The circuit of each system from the fuse (or fusible link) to ground is shown. The power supply is shown at the top and the ground at the bottom to facilitate understanding of how the current flows.

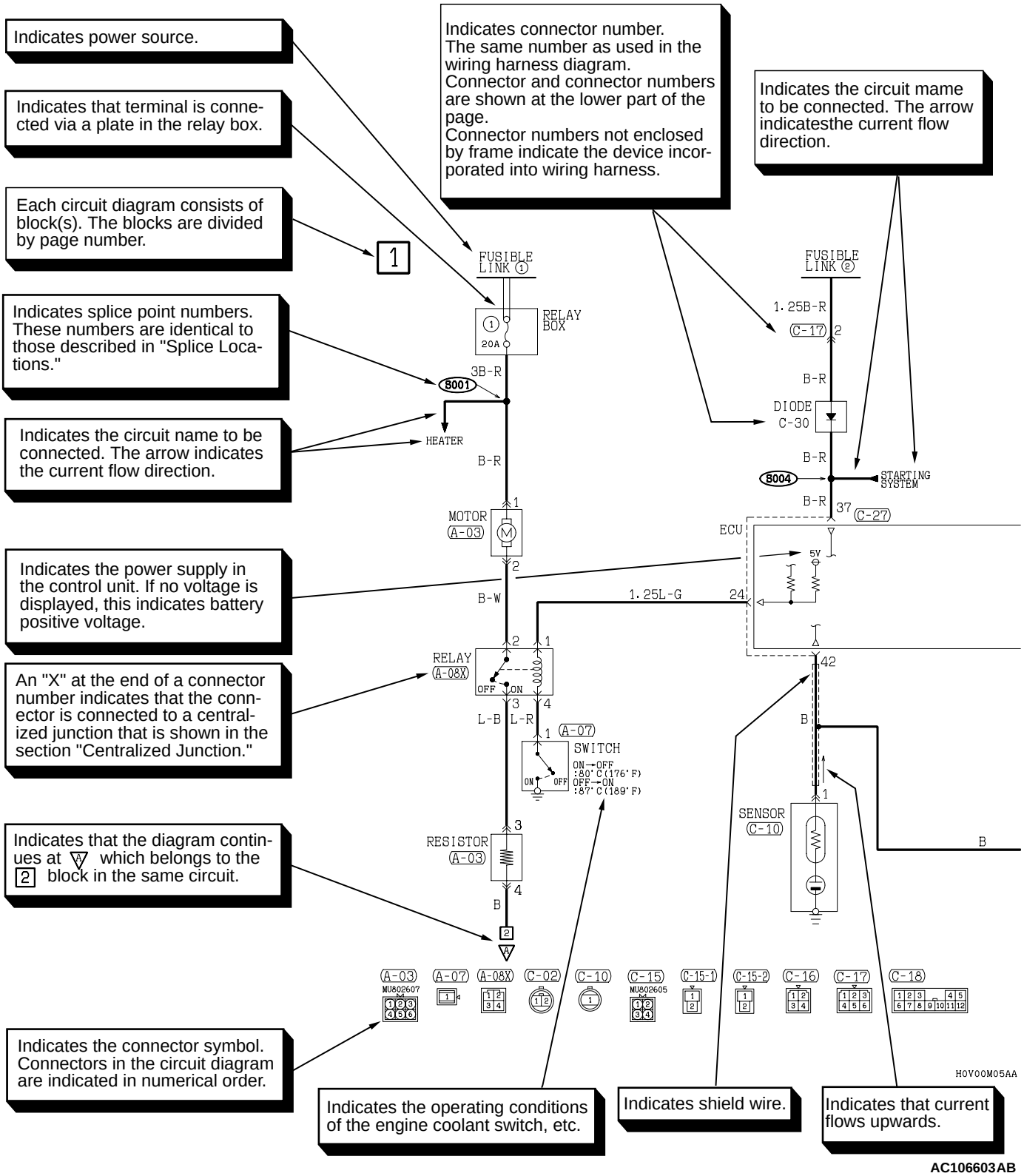

AC106603AB

TSB Revision

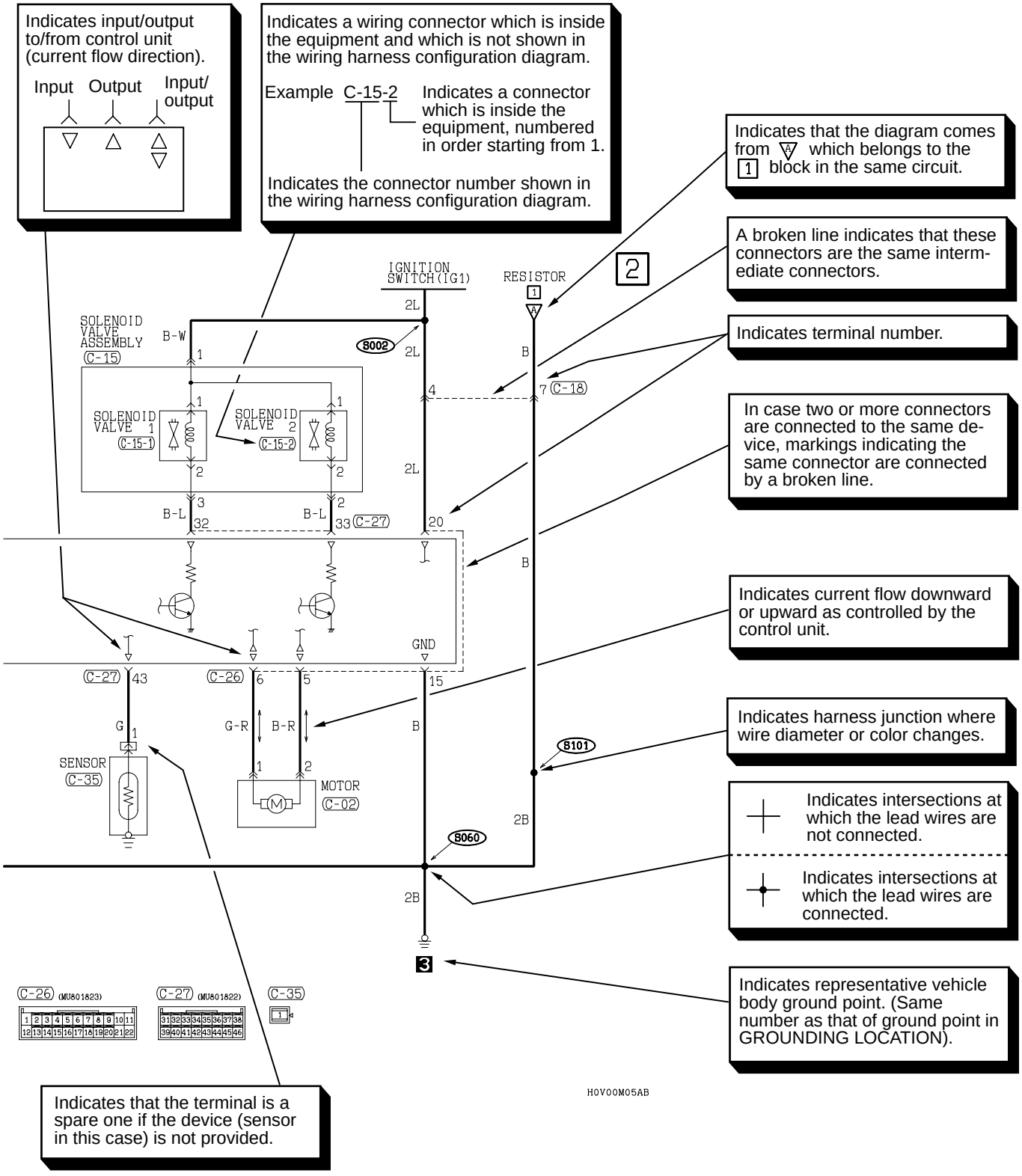

AC106604AB

TSB Revision

CONNECTOR/GROUNDING INDICATIONS

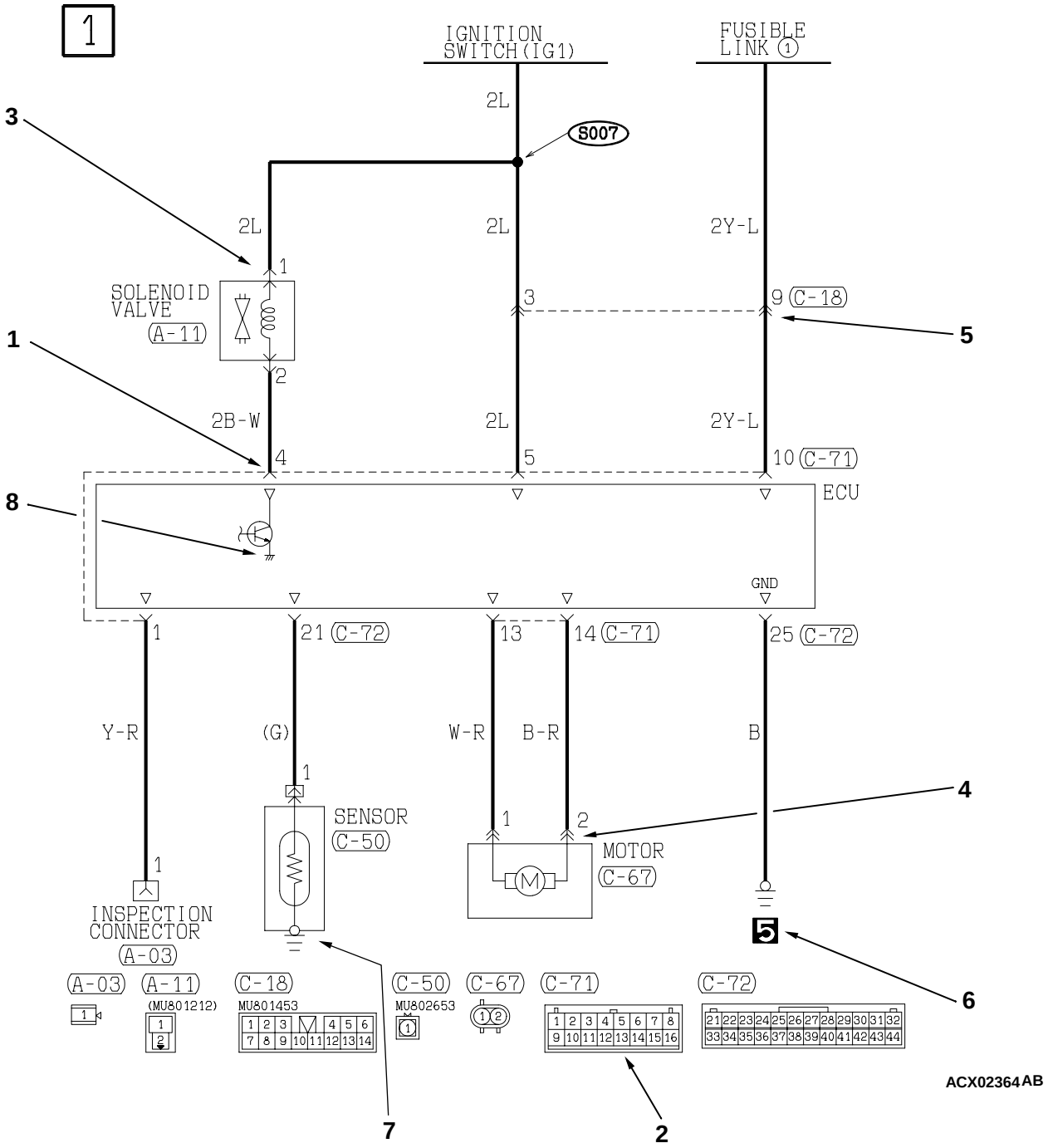

ITEM	NO.	CONNECTOR/ GROUNDING	SYMBOL	CONTENTS
Connector and terminal marking	1	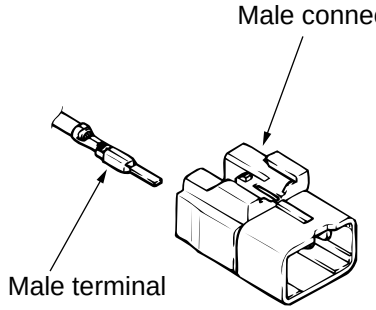 ACX01251AB	Male terminal ACX01252AB	The male and female terminals are indicated as shown. The connector with male terminal(s) is called as male connector and indicated by two connector contour lines, while the connector with female terminal(s) is called as female connector and indicated by single connector contour line.
			ale connector 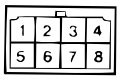 ACX01253AB	
		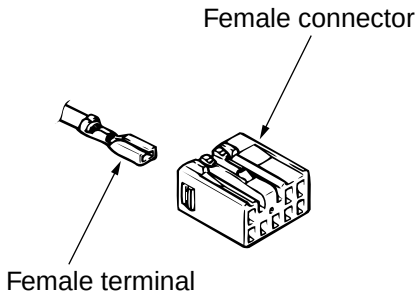 ACX01254AB	Female terminal ACX01255AB	
			Female connector 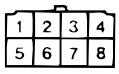 ACX01256AB	
Connector symbol marking	2	Device 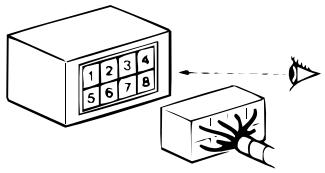 ACX01257AB	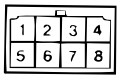 ACX01253	The symbol indicates the connector is viewed as shown. At a device connection, the connector symbol on the device side is shown. For an intermediate connector, the male connector symbol is shown. For spare connectors and check connectors, no device is connected, and so the harness-side connector symbol is shown for these connectors. For the data link connector, its contents differ from the previous description. Refer to "scan tool operation instruction" in detail.
		Intermediate connector 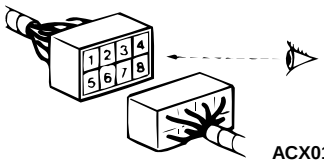 ACX01258AB		
		Spare cnnector, check connector 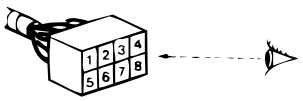 ACX01816AB	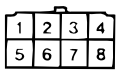 ACX01256	

ITEM	NO.	CONNECTOR/ GROUNDING	SYMBOL	CONTENTS
Connector connection marking	3	Direct connection type ACX01260 AB	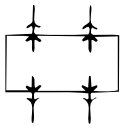 ACX01261	Connection between a device and the harness is either by direct insertion in the device (direct connection type) or by connection with a harness connector furnished on the device side (harness connection type). The two types are indicated as illustrated.
	4	Harness connection type 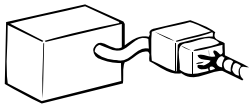 ACX01262 AB	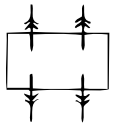 ACX01263	
	5	Intermediate connector 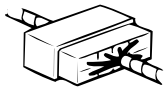 ACX01264 AB	ACX01265	
Ground markings	6	Body ground ACX01273 AB	ACX01274	Grounding is either by body ground, device ground or control unit interior ground. These are indicated as illustrated.
	7	Device ground ACX01275 AB	ACX01276	
	8	Ground in control unit ACX01277AB	ACX01278	

SYMBOLS (EXCEPT CONNECTOR AND GROUNDING)

Devices appearing in circuit diagrams are indicated by the following symbols.

attery ACX02377AB	uzzer ACX02378 AB	Capacitor ACX02379AB	lectrolytic apacitor ACX02380 AB	Variable capacitor ACX02381 AB	Coil ACX02382 AB
iode ACX02383 AB	ight emitting iode ACX02384 AB	hoto diode ACX02385 AB	Zener diode ACX02386 AB	ual bulb 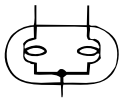 ACX02387 AB	Single bulb ACX02388 AB
Fuse ACX02389AB	Fusible link ACX02390 AB	orn ACX02391AB	otor ACX02392 AB	Pulse generator 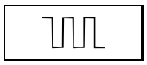 ACX02393 AB	Piezoelectric device ACX02394 AB
Resistor ACX02395AB	Variable resistor 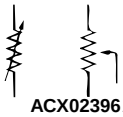 ACX02396 AB	Speaker 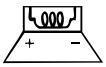 ACX02397AB	Thermistor ACX02398 AB	Transistor 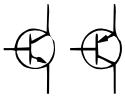 ACX02399 AB	hoto transistor ACX02400 AB

WIRE COLOR CODES

Wire color are identified by the following color codes.

CODE	WIRE COLOR	CODE	WIRE COLOR	CODE	WIRE COLOR	CODE	WIRE COLOR
B	Black	L	Blue	R	Red	Y	Yellow
BR	Brown	LG	Light green	SB	Sky blue	–	–
G	Green	O	Orange	V	Violet	–	–
GR	Gray	P	Pink	W	White	–	–

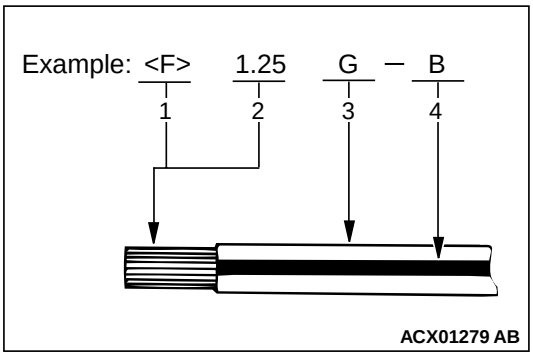

If a cable has two colors, the first of the two color code characters indicates the basic color (color of the cable coating) and the second indicates the marking color.

NO.	MEANING
1	<F>: Flexible wire
	<T>: Twisted wire
2	Wire size (mm^2)*
3	Basic color (color of the cable coating)
4	Marking color

NOTE:

**: No code indicates 0.5 mm^2(0.0008 in^2).Cable color code in parentheses indicates 0.3 mm^2 (0.0005 in^2).*

JUNCTION BLOCK

M1901000200466

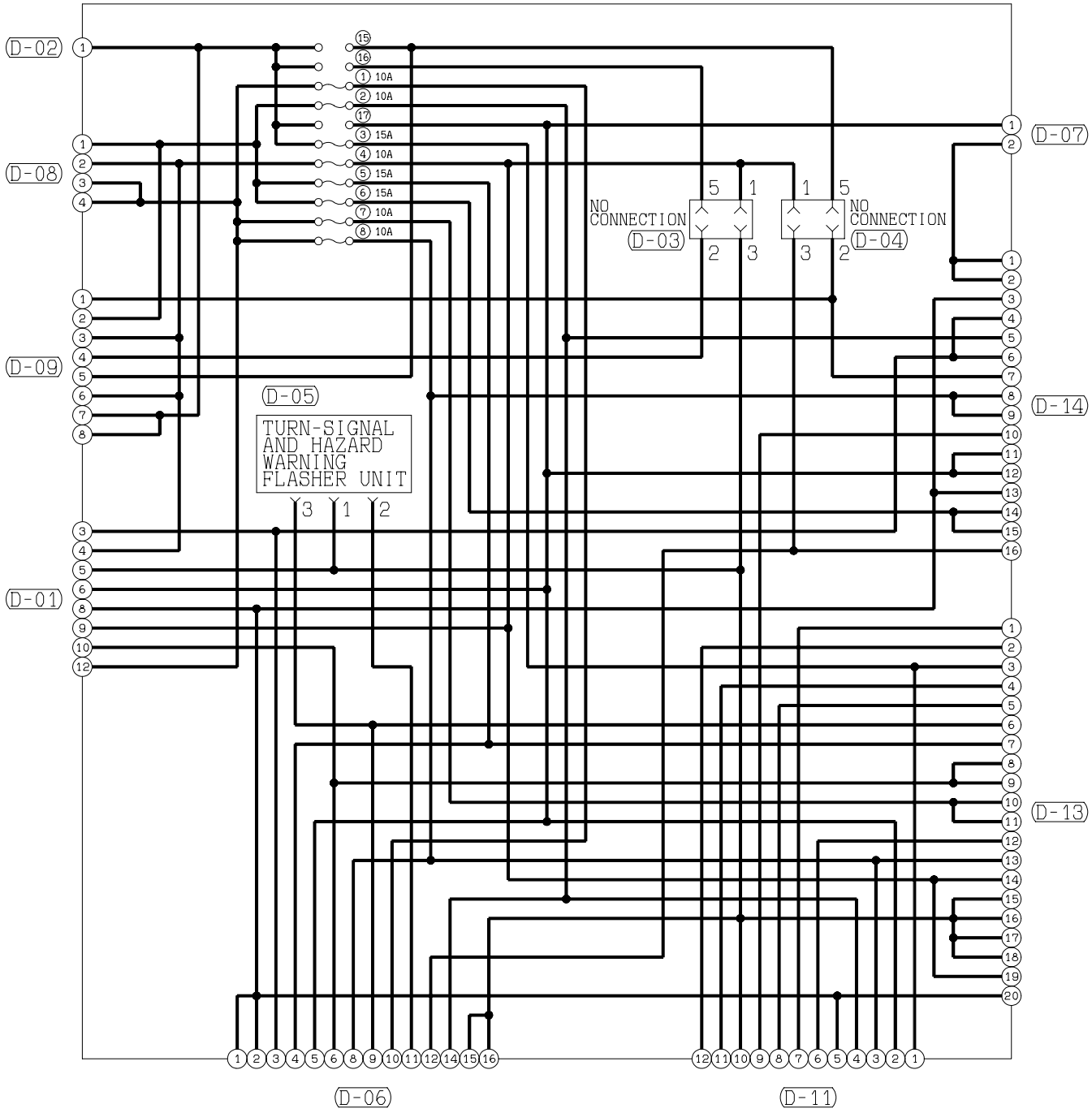

NOTE
CONNECTOR NUMBERS ARE KEYED TO THE CONFIGURATION DIAGRAM AND EACH CIRCUIT DIAGRAM.

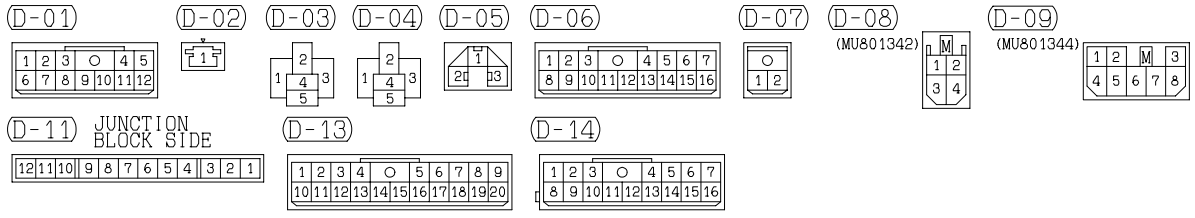

H3P00M00AA

TSB Revision

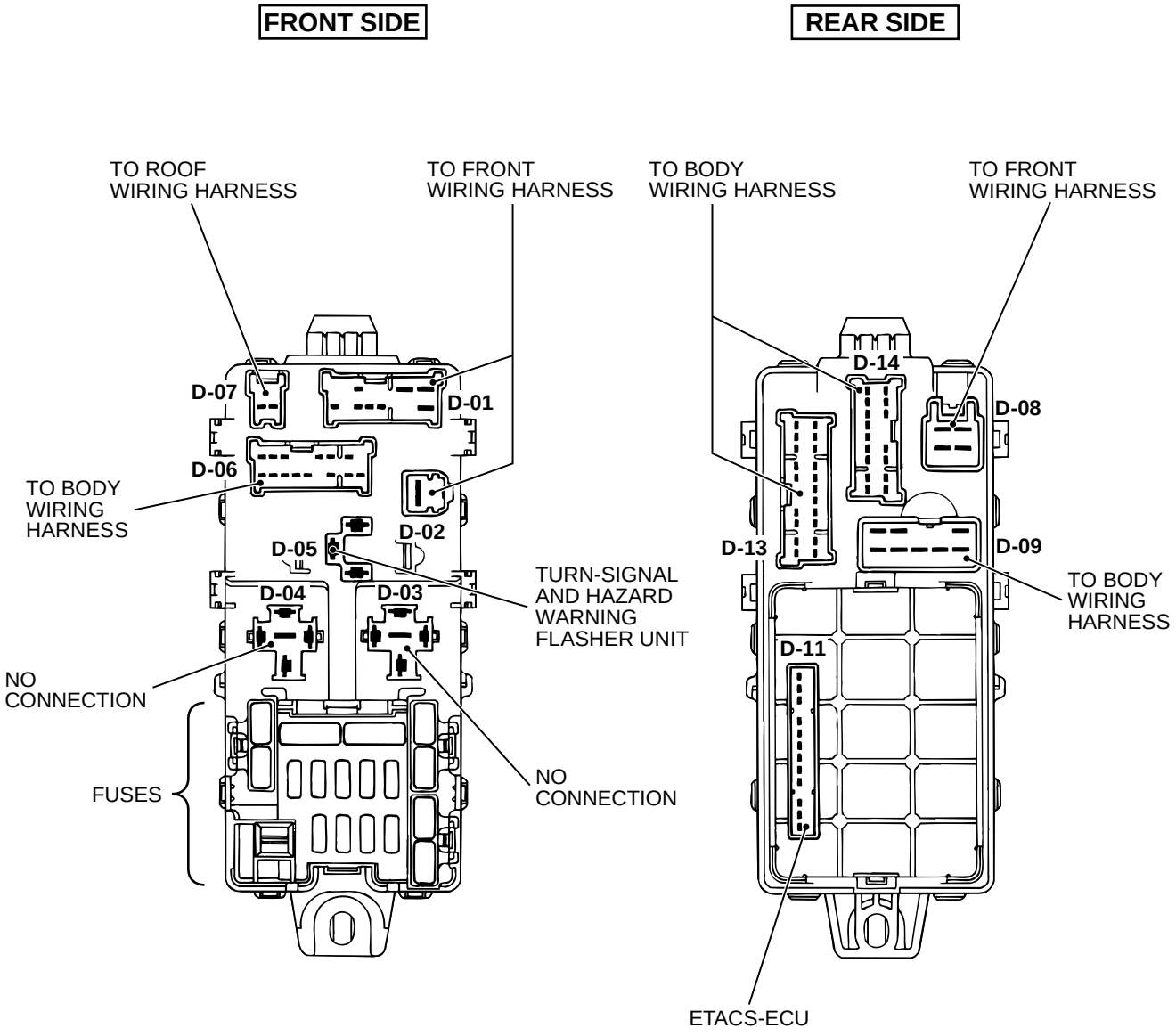
FRONT SIDE
REAR SIDE
TO ROOF WIRING HARNESS
TO FRONT WIRING HARNESS
TO BODY WIRING HARNESS
TO BODY WIRING HARNESS
D-07
D-01
D-06
D-02
D-05
D-04
D-03
TURN-SIGNAL AND HAZARD WARNING FLASHER UNIT
NO CONNECTION
FUSES
NO CONNECTION
D-14
D-08
D-13
D-09
D-11
TO BODY WIRING HARNESS
ETACS-ECU
AC005023AC

JOINT CONNECTOR

M1901014200447

NOTE
IN THE ACTUAL VEHICLE, SOME OF THE JOINT CONNECTOR TERMINALS IN THE SAME BUS ARE USED, SO IN SOME CASES, THE TERMINAL ARRANGEMENT INDICATED ON THE CIRCUIT DIAGRAMS DO NOT COINCIDE WITH THE ONES IN THE ACTUAL VEHICLE.

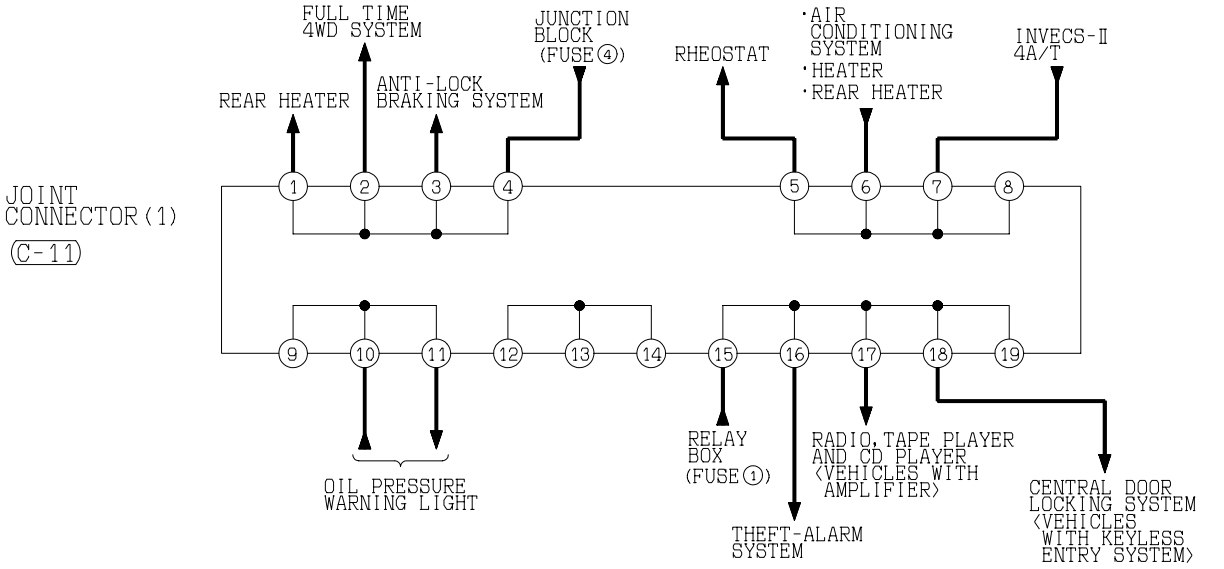

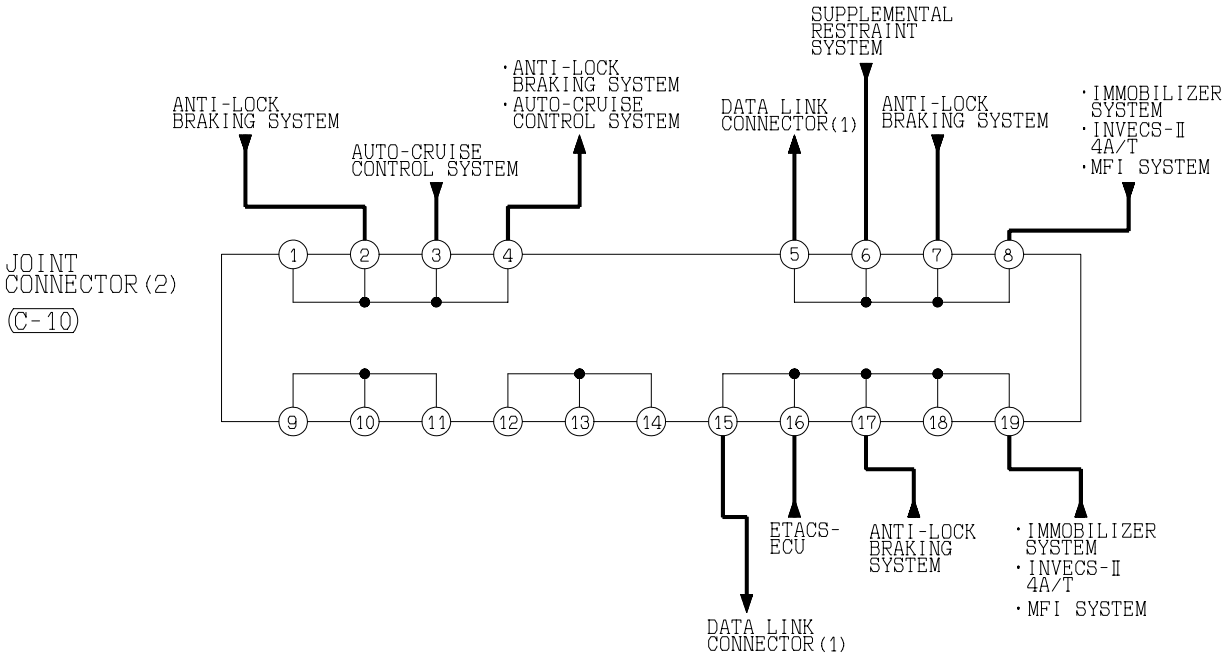

C-10
MU801559

1	2	3	4						5	6					7	8		
9	10	11	12	13	14	15	16	17	18	19								

C-11
MU801559

1	2	3	4						5	6					7	8		
9	10	11	12	13	14	15	16	17	18	19								

C-70

1	2	3	4	5	6	7	8	9	10	11								
12	13	14	15	16	17	18	19	20	21	22								
23	24	25	26	27	28	29	30	31	32	33								

C-71

1	2	3	4	5	6	7	8	9	10	11								
12	13	14	15	16	17	18	19	20	21	22								
23	24	25	26	27	28	29	30	31	32	33								

H3P00M01AA

TSB Revision

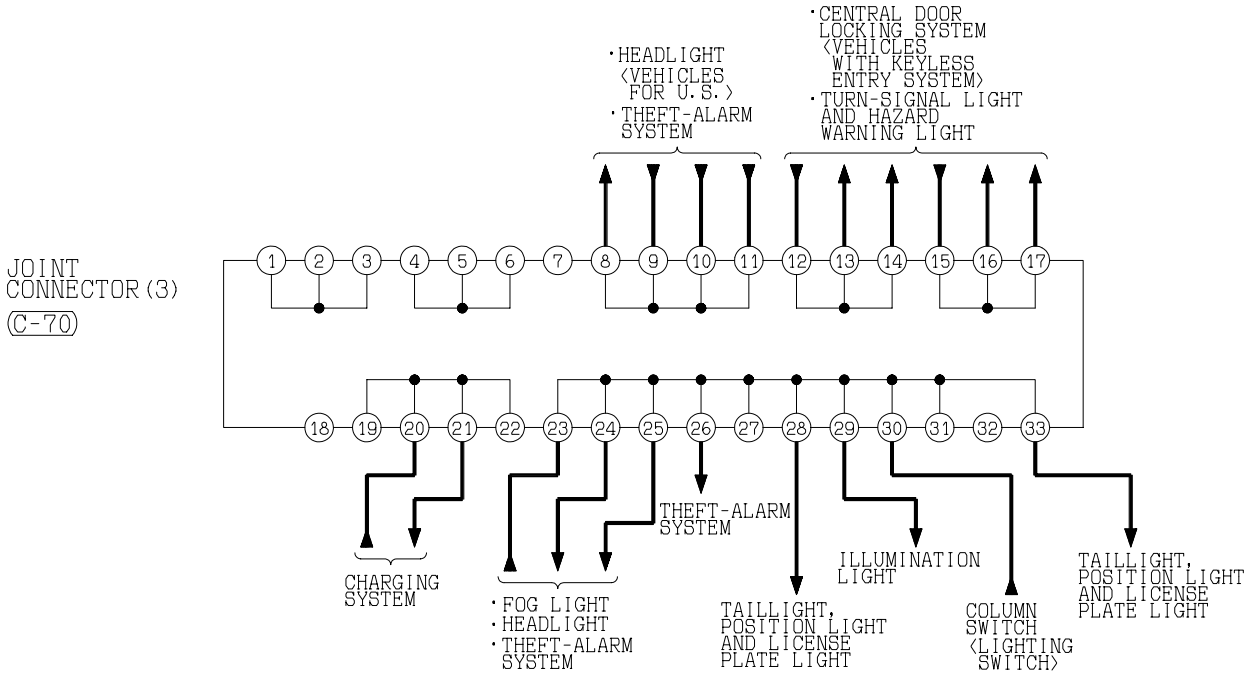

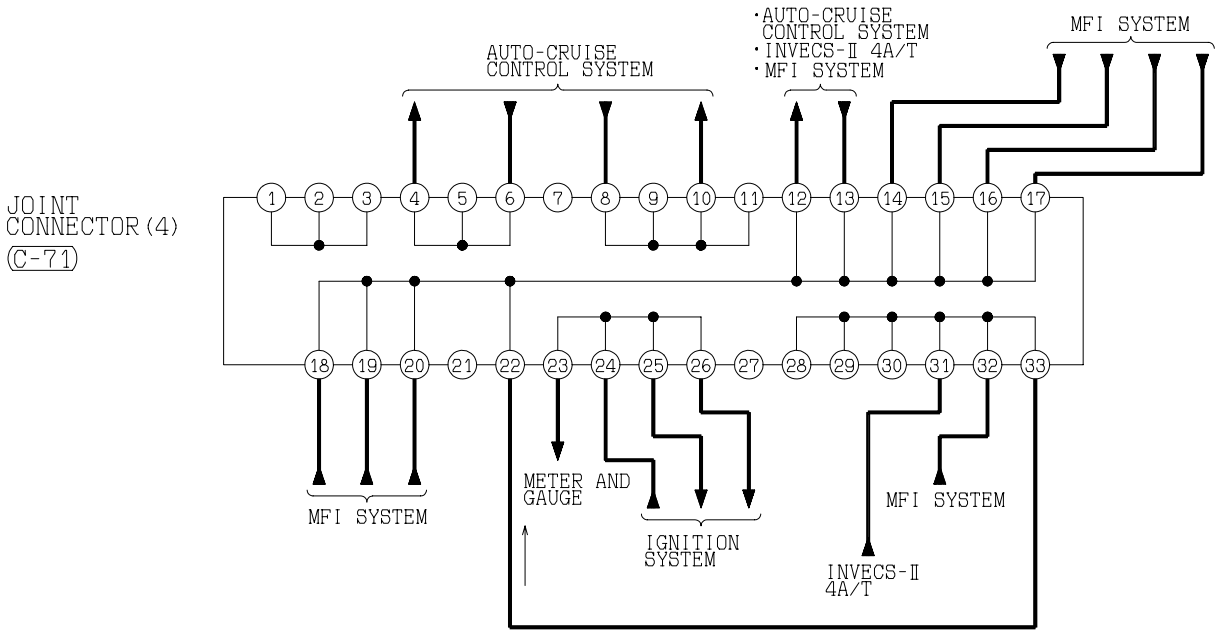

H3P00M01AB

TSB Revision

JOINT CONNECTOR (CONTINUED)

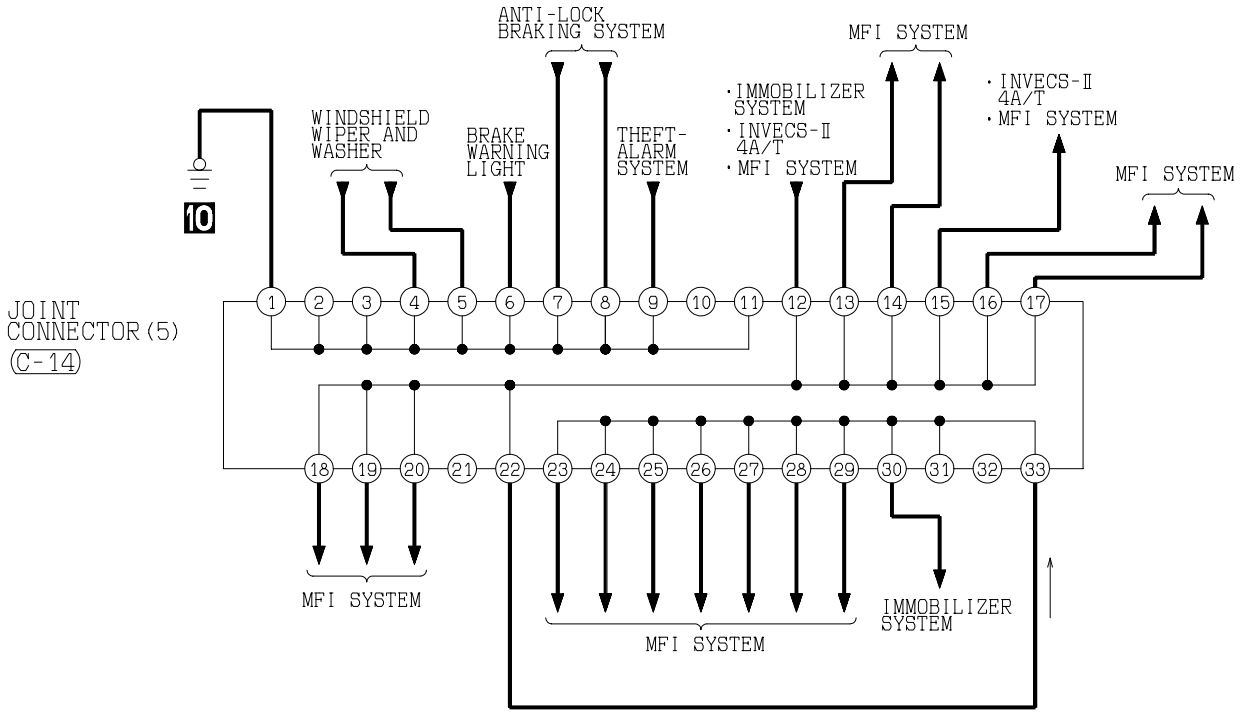

C-14

1	2	3	4	5	6	7	8	9	10	11
12	13	14	15	16	17	18	19	20	21	22
23	24	25	26	27	28	29	30	31	32	33

H3P00M01BA

NOTES

CENTRALIZED JUNCTION

M1901000300441

FUSIBLE LINK AND FUSE

ENGINE COMPARTMENT

NO.	POWER SUPPLY CIRCUIT	NAME	RATED CAPACITY (A)	HOUSING COLOR	LOAD CIRCUIT
1	Fusible link No.8	Fuse	10	Red	Amplifier, antenna motor-ECU, cargo space light, clock, combination meter, data link connector, dome light, door light, ETACS-ECU, keyless entry receiver-ECU, key reminder switch, map light, powertrain control module, radio, security indicator and vanity mirror light
2	Headlight relay		10	Red	Combination meter and fog light relay
3			15	Blue	Fog light relay
4	Fusible link No.11		10	Red	Clock, glove box light, illumination light, rheoststst and taillight
5	Battery		10	Red	Turn-signal light and hazard warning relay
6		Fusible link	30	Pink	Blower relay
7			30	Pink	Fuse No.15, 16 (A/C relay bracket in engine compartment) circuit and fuse No.20 (in junction block) circuit
8			40	Green	Fuse No.1 (relay box in engine compartment) circuit and fuse No.3, 9, 10, 13, 14 (in junction block) circuit
9			40	Green	Ignition switch circuit and starter relay
10			30	Pink	Power window relay
11			30	Pink	Fuse No.2, 3, 4 (relay box in engine compartment) circuit, fuse No.19 (relay box in passenger compartment) circuit, generator and headlight relay
12			20	Light blue	Multiport fuel injection relay and powertrain control module
13			100	Blue	Fuse No.5 (relay box in engine compartment) circuit, fusible link No.9, 10, 11, 12 (after starting the engine) circuit and fusible link No.6, 7, 8 (when the engine is stopped) circuit
14			60	Yellow	ABS-ECU
15	Fusible link No.7	Fuse	25	Transparent	Condenser fan motor
16			10	Red	A/C compressor relay

(RELAY BOX IN ENGINE COMPARTMENT)

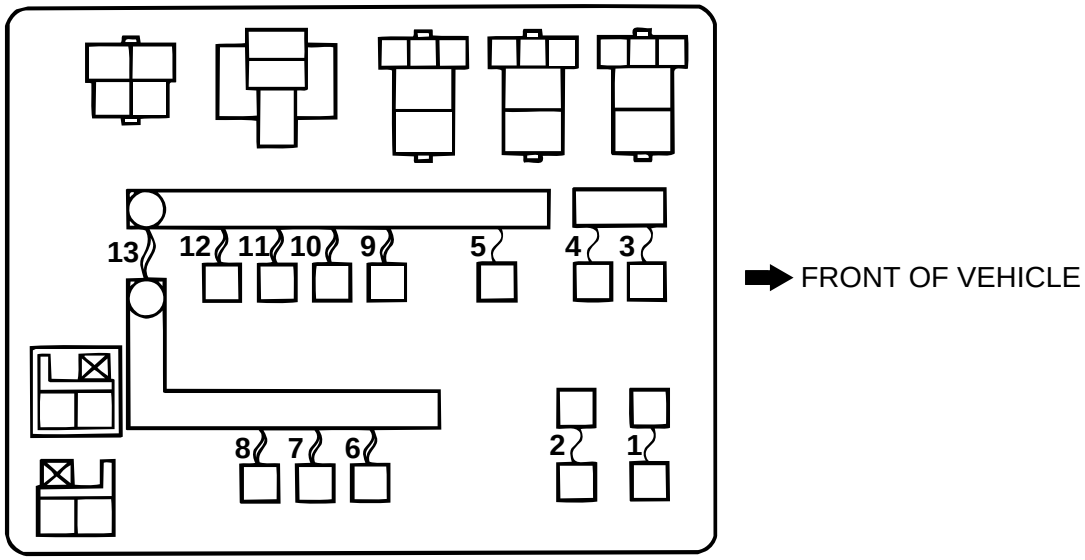

AC005024AC

(CONNECTED DIRECTLY TO BATTERY POSITIVE TERMINAL)

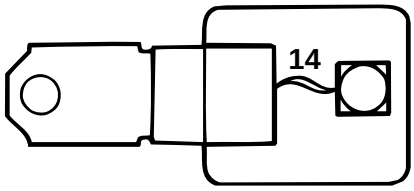

AC005025AC

(A/C RELAY BRACKET IN ENGINE COMPARTMENT)

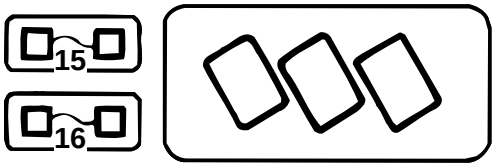

AC201574AB

PASSENGER COMPARTMENT

NO.	POWER SUPPLY CIRCUIT	NAME	RATED CAPACITY (A)	HOUSING COLOR	LOAD CIRCUIT
1	Ignition switch (IG1)	Fuse	10	Red	Turn-signal and hazard warning flasher unit
2	Ignition switch (ACC)		10	Red	Accessory socket relay, antenna motor-ECU, auto-cruise control switch, clock, inside rear view mirror assembly, keyless entry receiver-ECU and radio
3	Fusible link No.8		15	Blue	ETACS-ECU and theft-alarm horn relay
4	Ignition switch (IG2)		10	Red	4WD indicator-ECU, A/C compressor relay, ABS-ECU, ABS relay, condenser fan motor relay, defogger timer, DRL-ECU, G-sensor, outside/inside air selection damper control motor, outside/inside air selection switch, rear heater indicator, rear heater relay and rear heater switch
5	Ignition switch (ACC)		15	Blue	Cigarette lighter and remote controlled mirror
6			15	Blue	Intermittent wiper relay, rear intermittent wiper relay, rear washer motor, rear wiper motor, windshield washer motor and windshield wiper motor
7	Ignition switch (IG1)		10	Red	Backup light, input shaft speed sensor, output shaft speed sensor, powertrain control module and SRS-ECU
8			10	Red	Antenna motor-ECU, auto-cruise control-ECU, combination meter, ETACS-ECU, powertrain control module, SRS-ECU, sunroof-ECU and vehicle speed sensor
9	Fusible link No.8		15	Blue	Stoplight
10			10	Red	Horn relay
11	Ignition switch (IG2)		10	Red	Heated seat and power window relay <vehicles without keyless entry system>
12	–		–	–	–
13	Fusible link No.8		25	Transparent	Defogger relay
14			15	Blue	Sunroof-ECU
15	–		–	–	–
16	–		–	–	–
17	–		–	–	–
18	Defogger relay		10	Red	Door mirror heater
19	Fusible link No.11		15	Blue	Accessory socket relay
20	Fusible link No.7		15	Blue	Rear heater relay

(IN JUNCTION BLOCK)

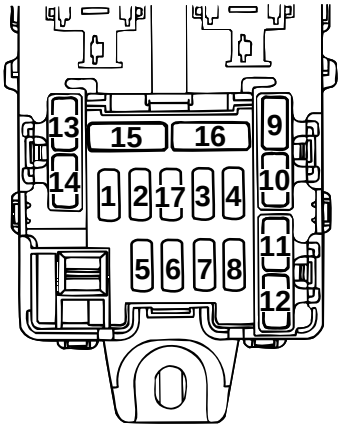

AC201575AB

(RELAY BOX IN PASSENGER COMPARTMENT)

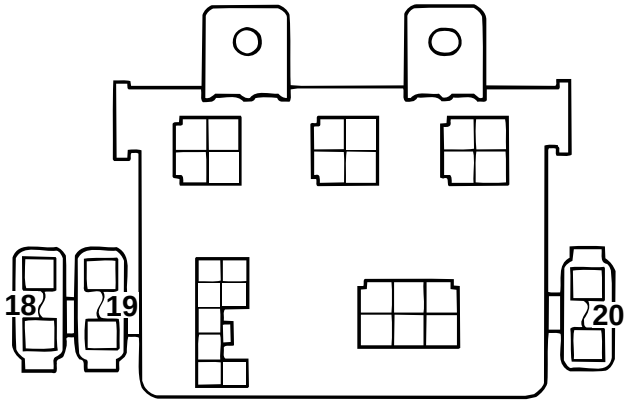

AC005027AE

CENTRALIZED RELAY

CONNECTOR NO.	NAME	CONNECTOR NO.	NAME
A-49X	–	A-56X	Condenser fan motor relay
A-50X	Starter relay	A-57X	–
A-51X	Fog light relay	C-73X	Accessory socket relay
A-52X	Headlight relay	C-74X	Rear heater relay
A-53X	Blower relay	C-75X	Power window relay
A-54X	IOD or storage connector	C-76X	Defogger timer
A-55X	A/C compressor relay	C-77X	Rear intermittent wiper relay

(RELAY BOX IN ENGINE COMPARTMENT)

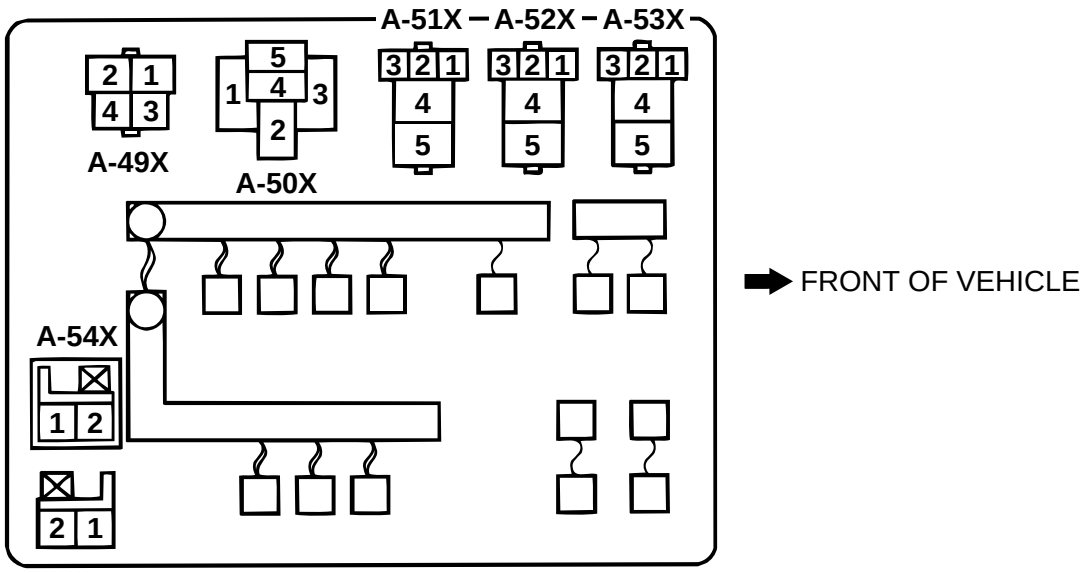

(A/C RELAY BRACKET IN ENGINE COMPARTMENT)

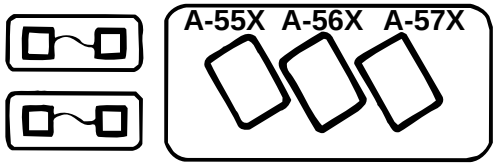

AC005029AC

(RELAY BOX IN PASSENGER COMPARTMENT)

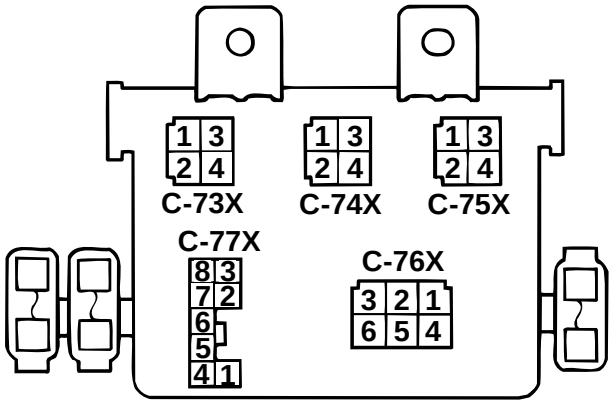

AC005027AF

POWER DISTRIBUTION SYSTEM

M1901000400471

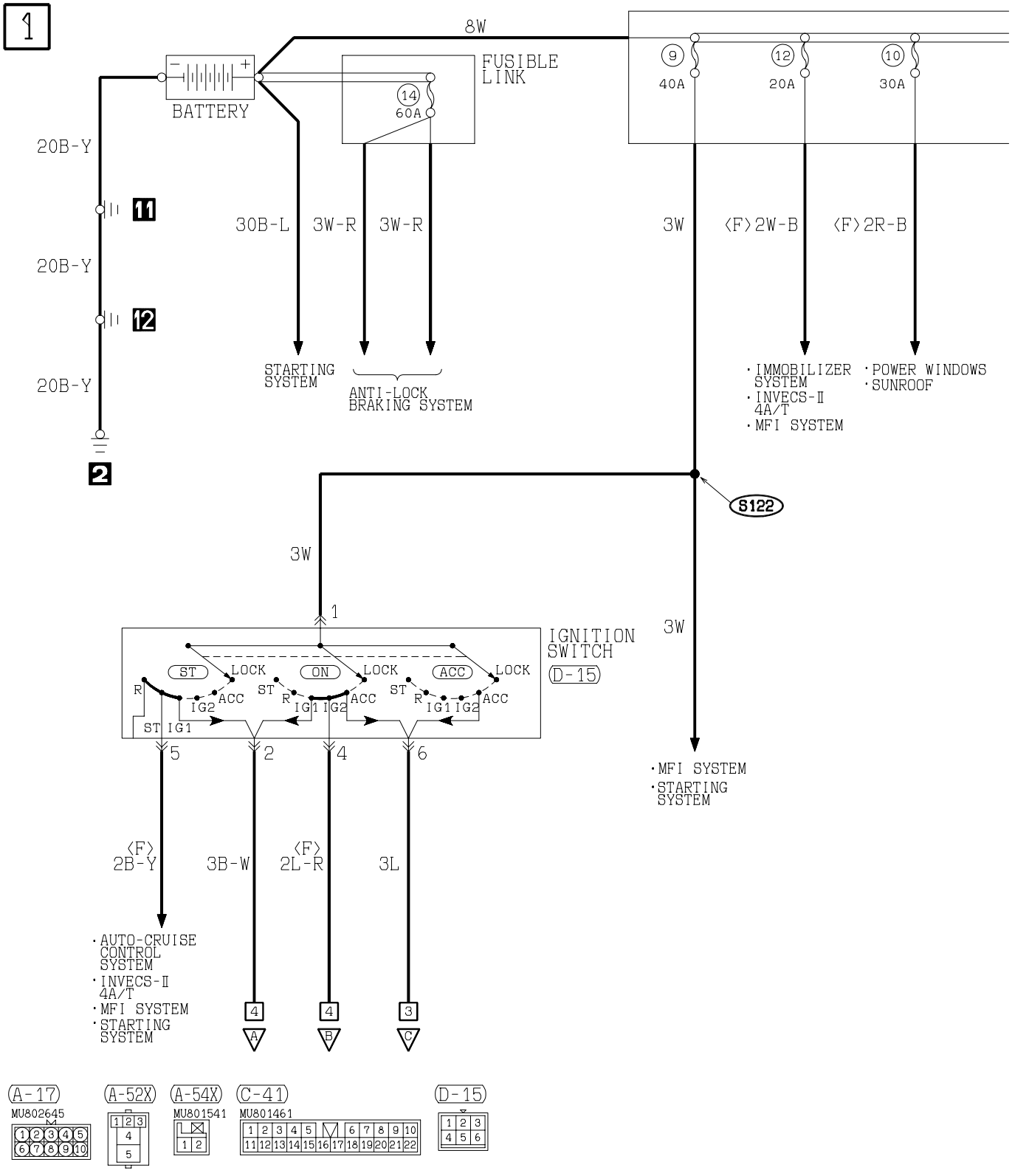

H3P01M00AA

TSB Revision

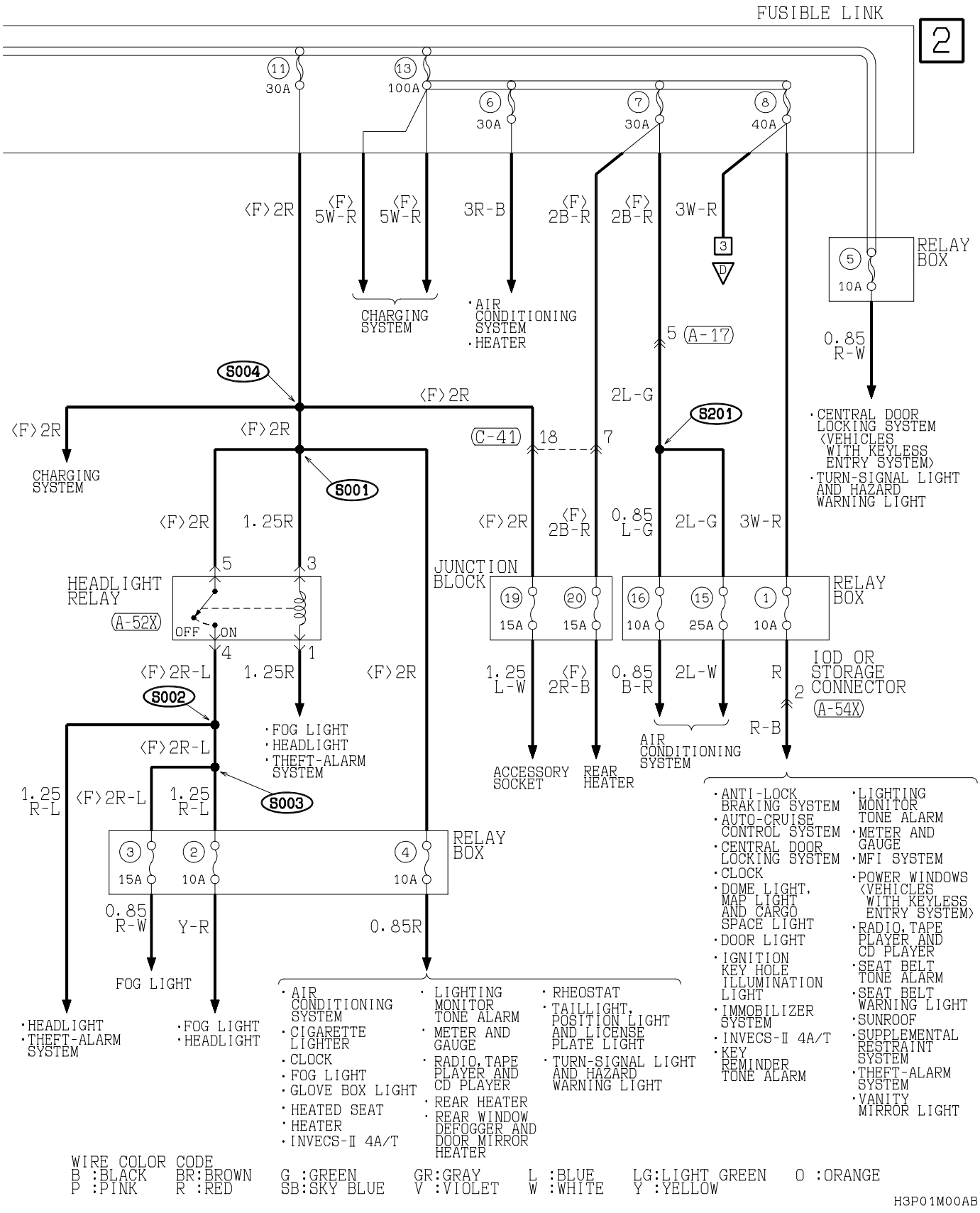

TSB Revision

POWER DISTRIBUTION SYSTEM (CONTINUED)

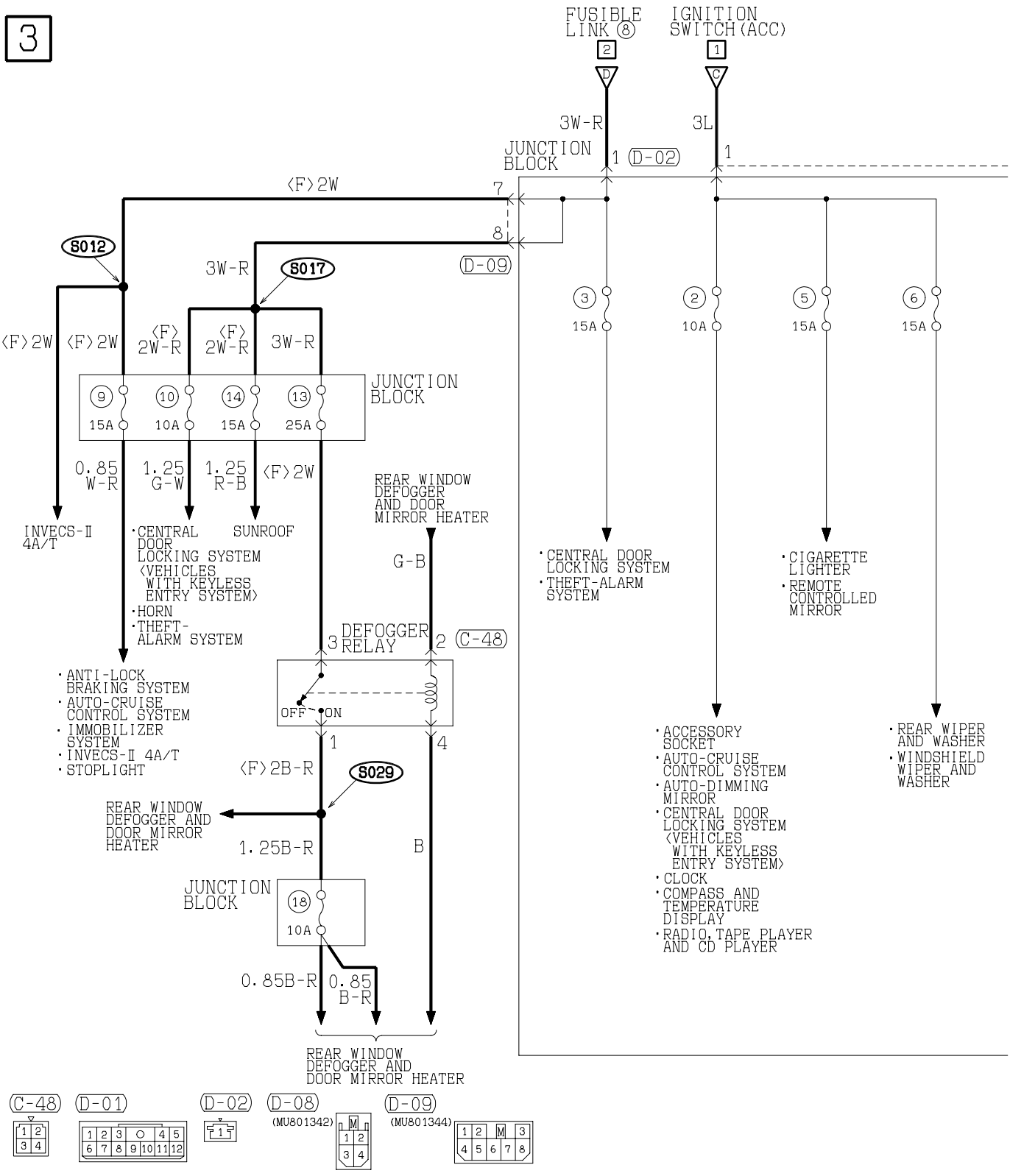

H3P01M00BA

TSB Revision

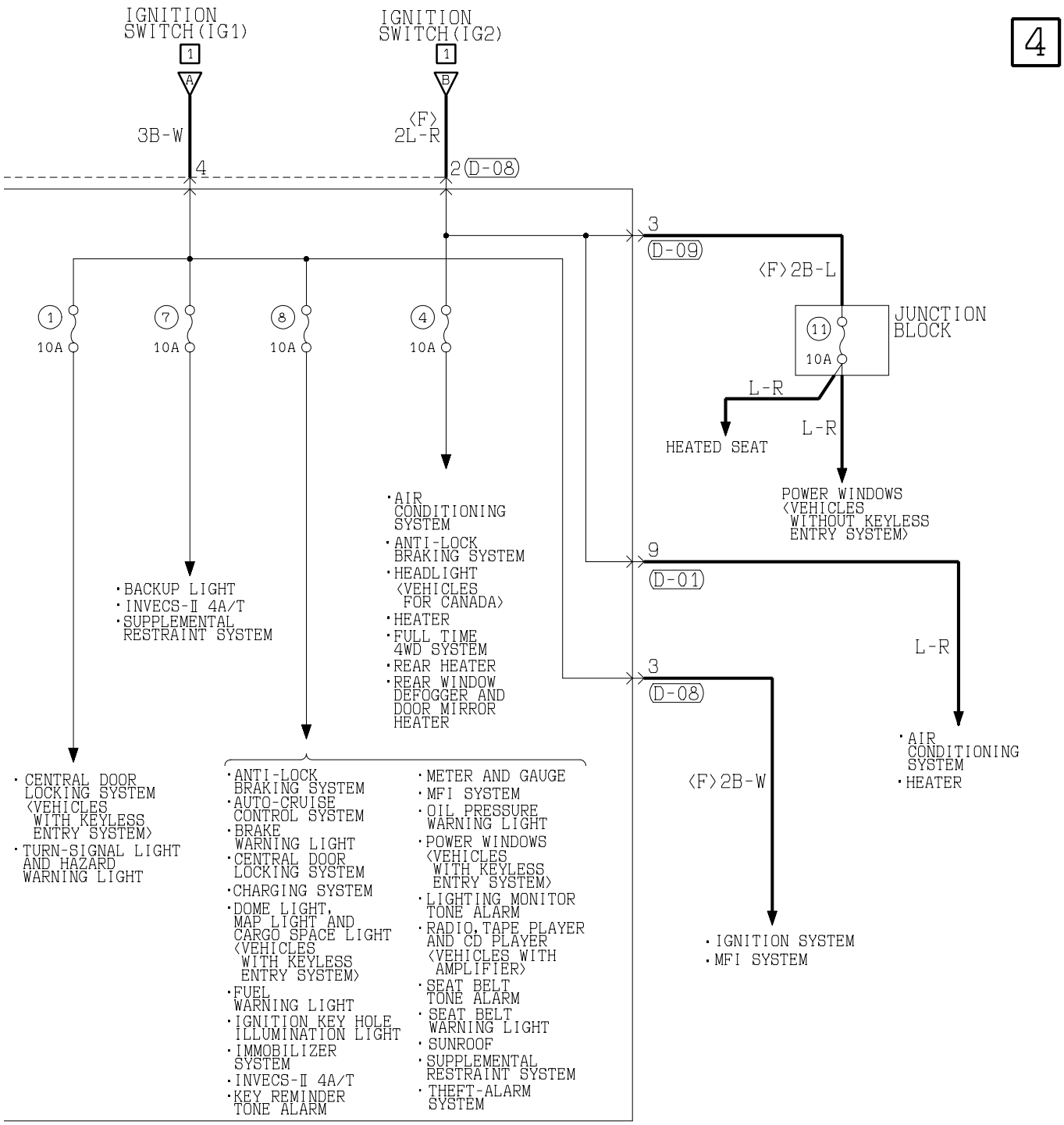

WIRE COLOR CODE

B :BLACK	BR:BROWN	G :GREEN	GR:GRAY	L :BLUE	LG:LIGHT GREEN	O :ORANGE
P :PINK	R :RED	SB:SKY BLUE	V :VIOLET	W :WHITE	Y :YELLOW	

H3P01M00BB

STARTING SYSTEM

M1901000500694

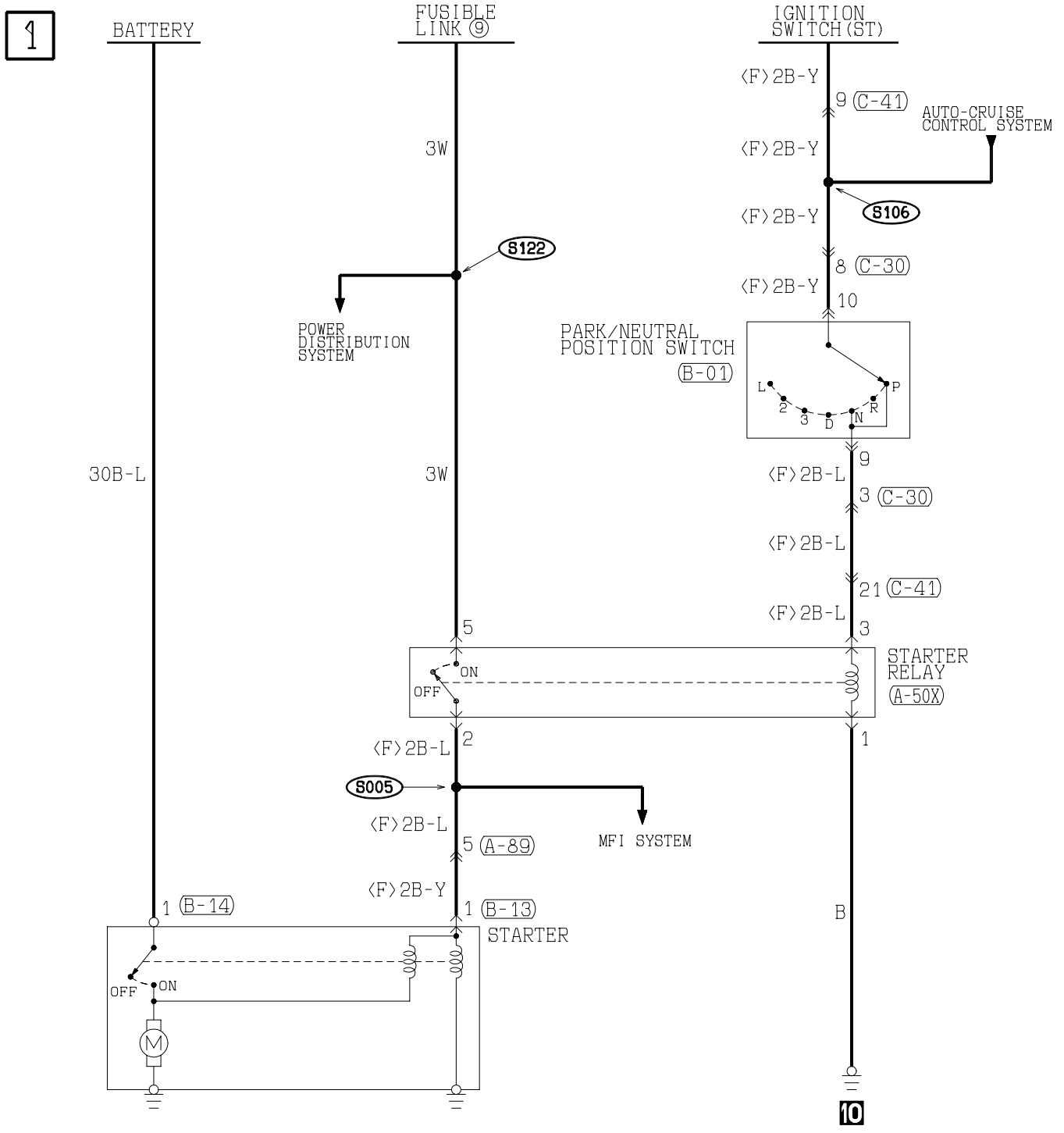

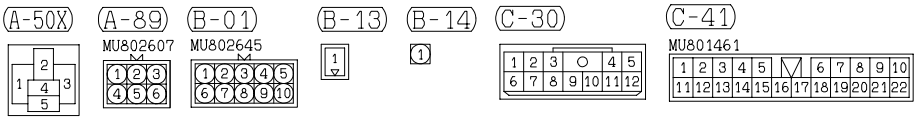

WIRE COLOR CODE

B :BLACK	BR:BROWN	G :GREEN	GR:GRAY	L :BLUE	LG:LIGHT GREEN	O :ORANGE	
P :PINK	R :RED	SB:SKY BLUE	V :VIOLET	W :WHITE	Y :YELLOW		

H3P02M00AA

TSB Revision

IGNITION SYSTEM

M1901000600969

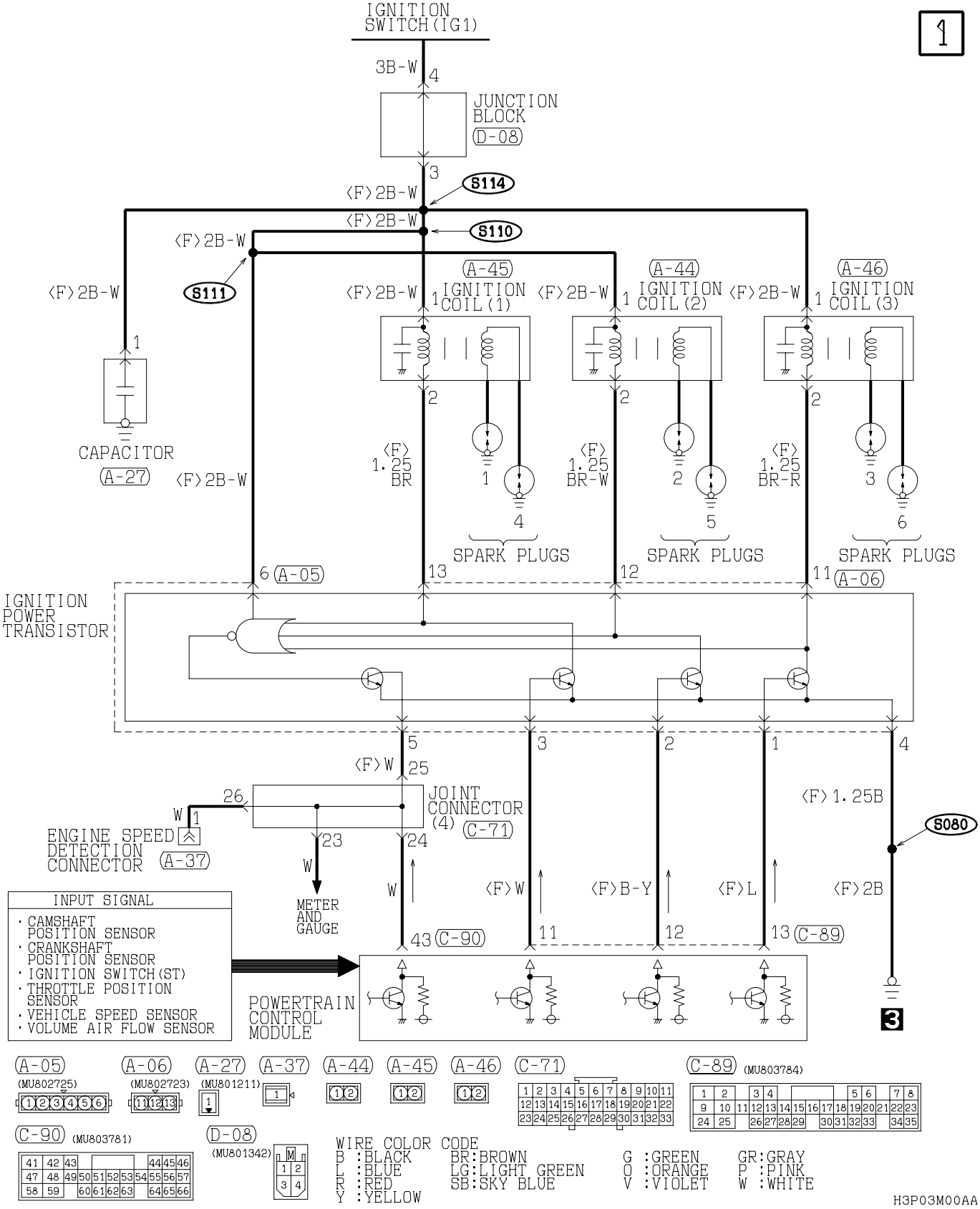

TSB Revision

CHARGING SYSTEM

M1901000700591

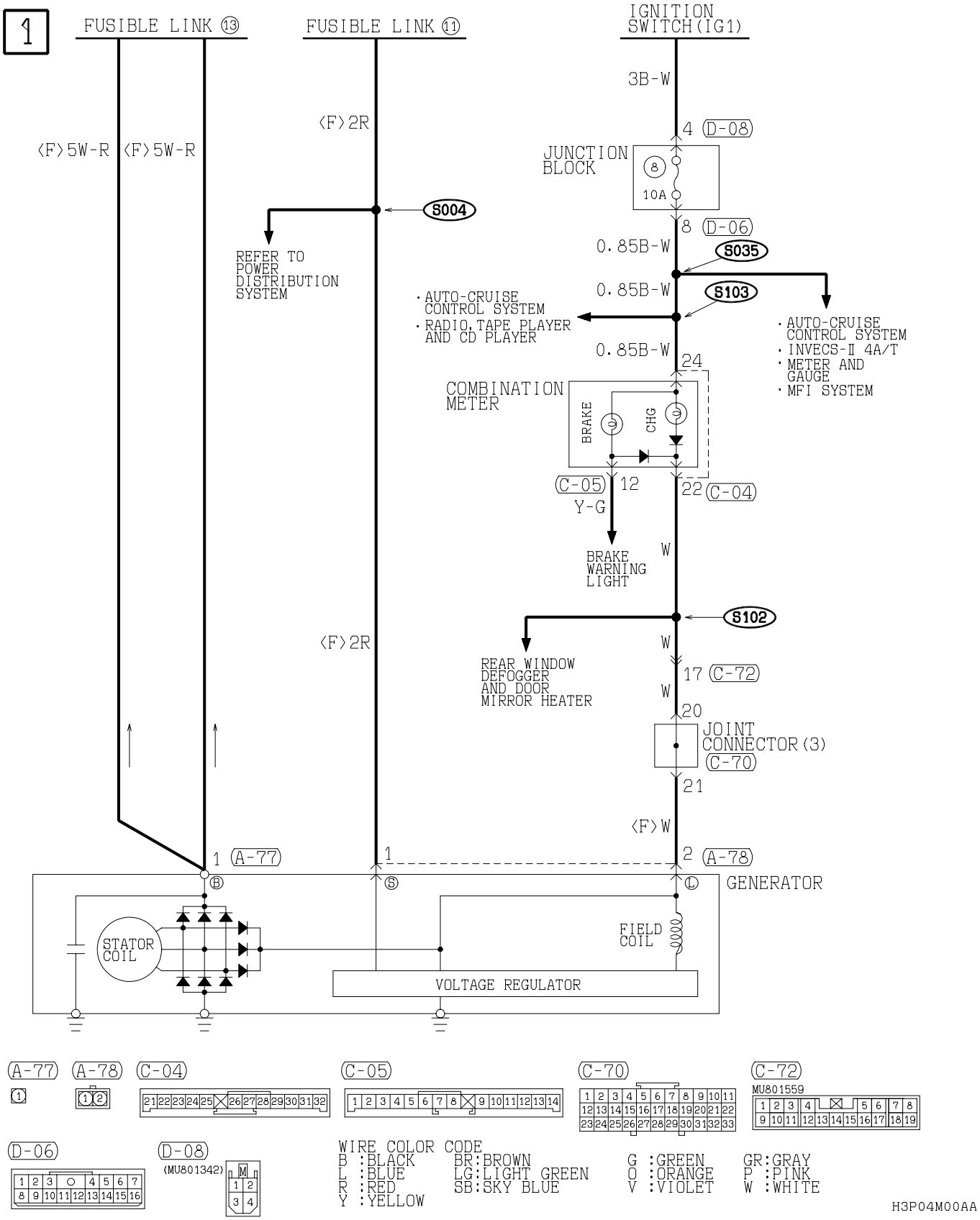

WIRE COLOR CODE

B :BLACK	BR:BROWN	G :GREEN	GR:GRAY
L :BLUE	LG:LIGHT GREEN	O :ORANGE	P :PINK
R :RED	SB:SKY BLUE	V :VIOLET	W :WHITE
Y :YELLOW			

H3P04M00AA

TSB Revision

NOTES

MFI SYSTEM

M1901000800985

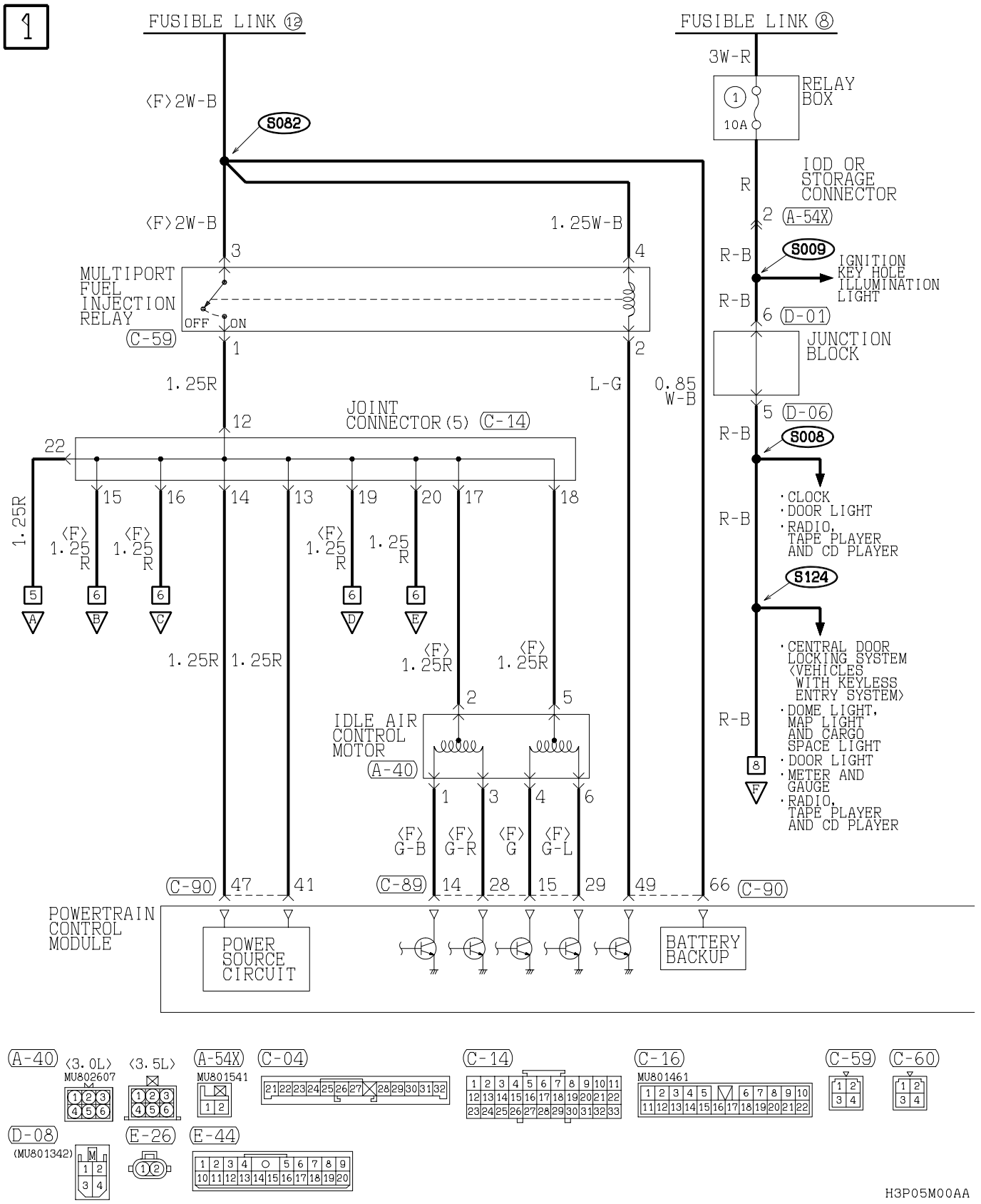

TSB Revision

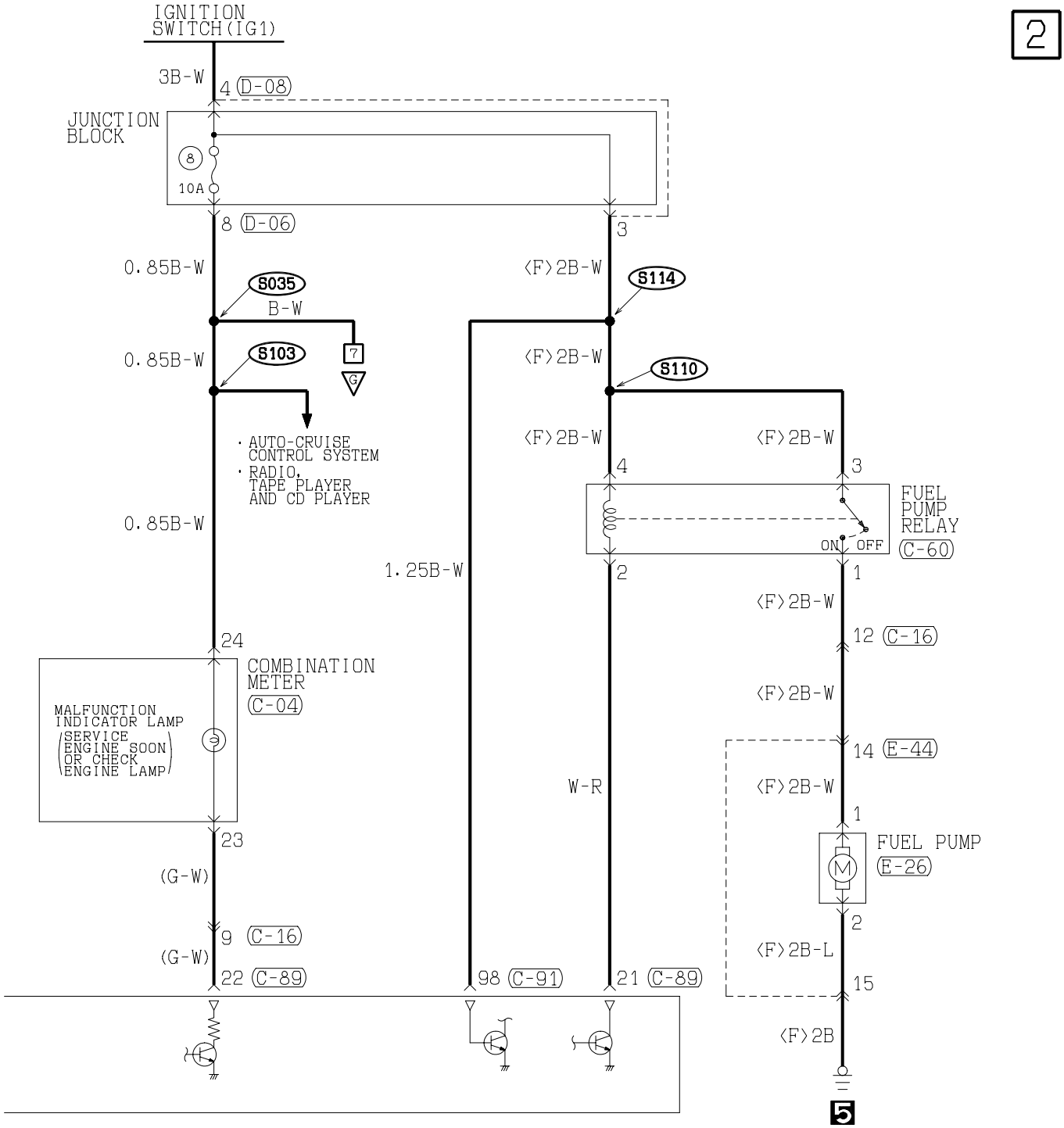

C-89 (MU803784)

1	2			3	4							5	6			7	8							
9	10	11	12	13	14	15	16	17	18	19	20	21	22	23										
24	25			26	27	28	29			30	31	32	33			34	35							

C-90 (MU803781)

41	42	43												44	45	46								
47	48	49	50	51	52	53	54	55	56	57														
58	59			60	61	62	63			64	65	66												

C-91 (MU803782)

71	72	73	74											75	76	77								
78	79	80	81	82	83	84	85	86	87	88	89													
90	91			92	93	94			95	96				97	98									

D-01

1	2	3	O	4	5	
6	7	8	9	10	11	12

D-06

1	2	3	O	4	5	6	7
8	9	10	11	12	13	14	15	16

WIRE COLOR CODE

B :BLACK	BR:BROWN	G :GREEN	GR:GRAY	L :BLUE	LG:LIGHT GREEN	O :ORANGE	
P :PINK	R :RED	SB:SKY BLUE	V :VIOLET	W :WHITE	Y :YELLOW		

H3P05M00AB

TSB Revision

MFI SYSTEM (CONTINUED)

3

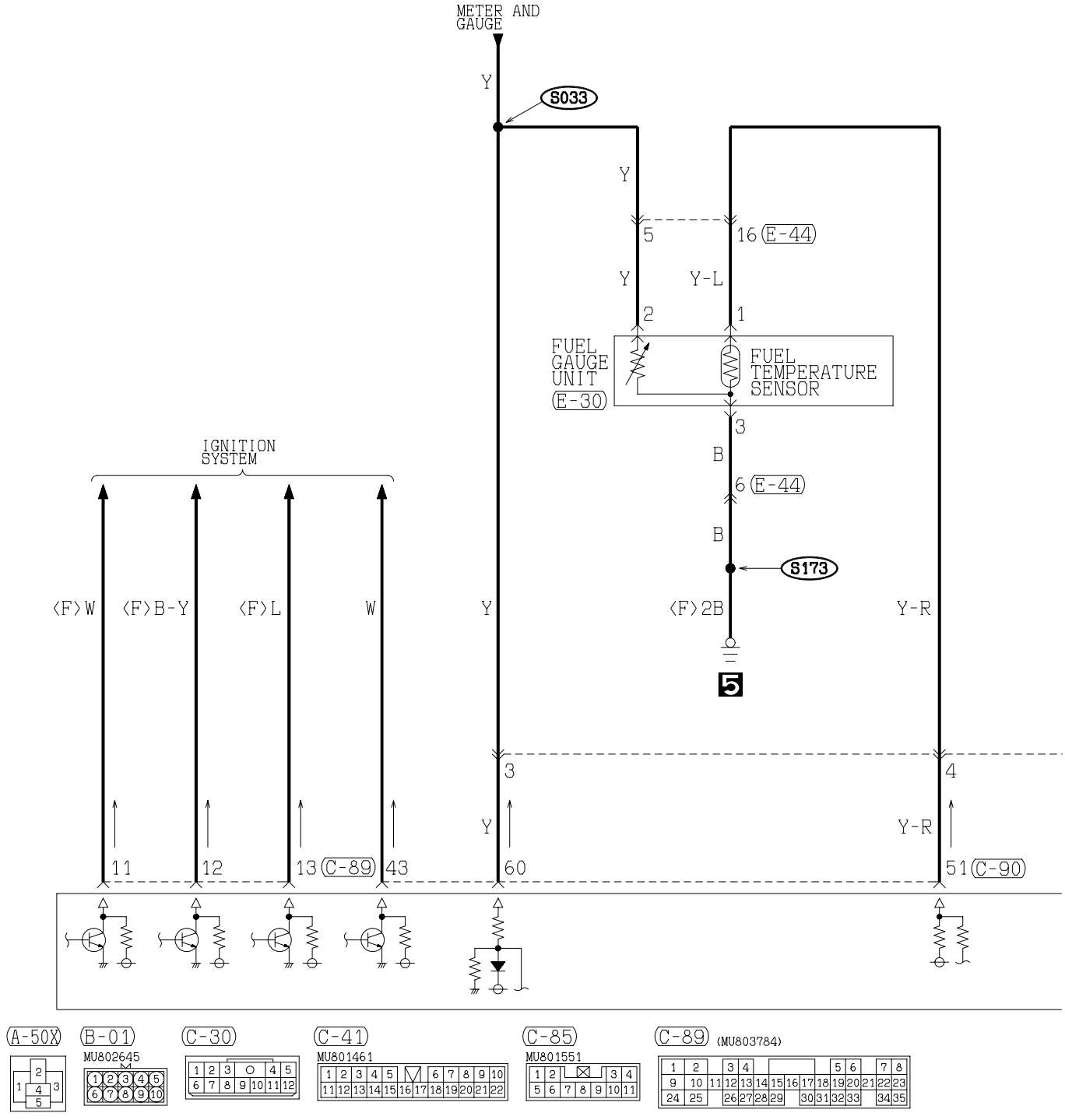

H3P05M00BA

TSB Revision

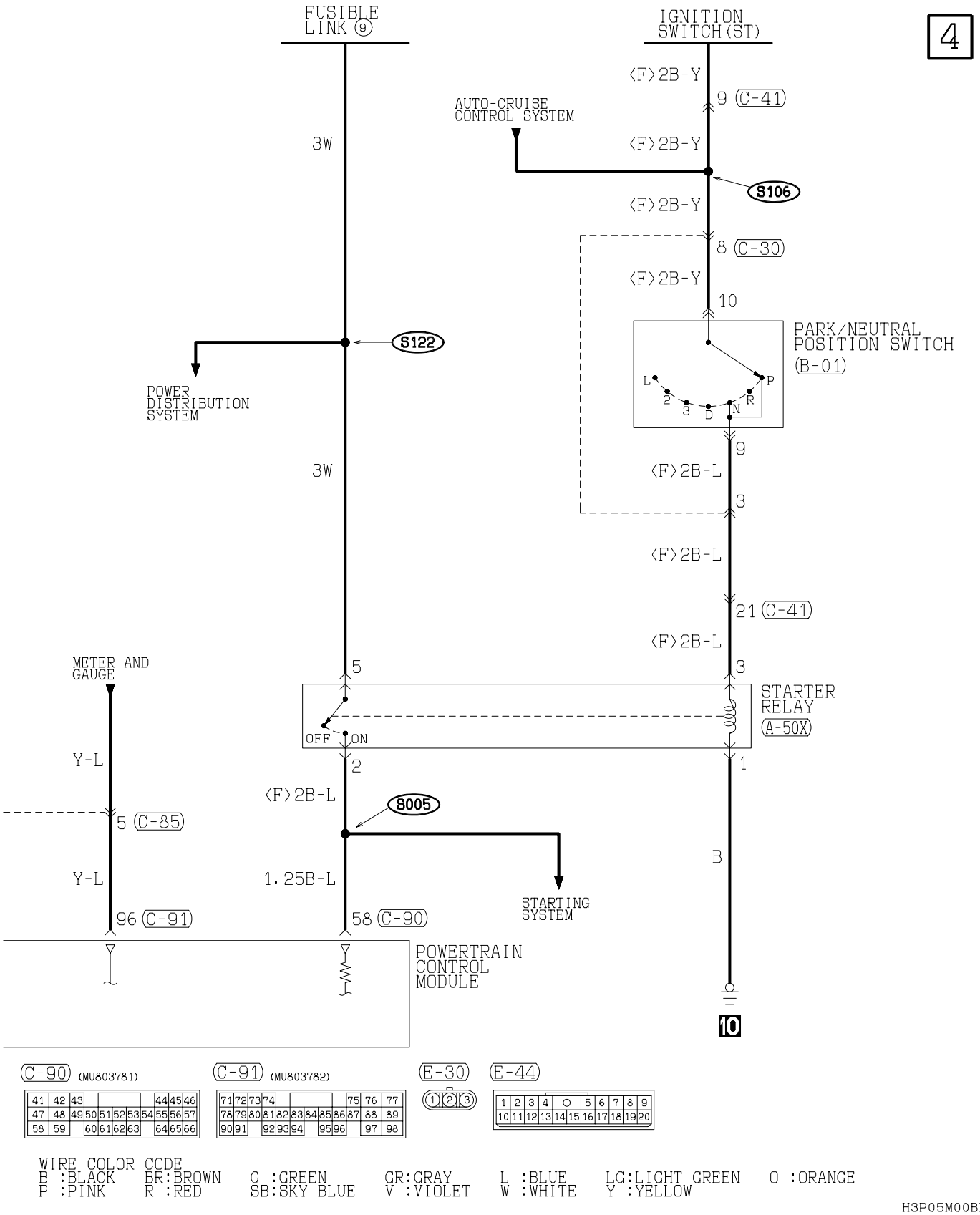

TSB Revision

MFI SYSTEM (CONTINUED)

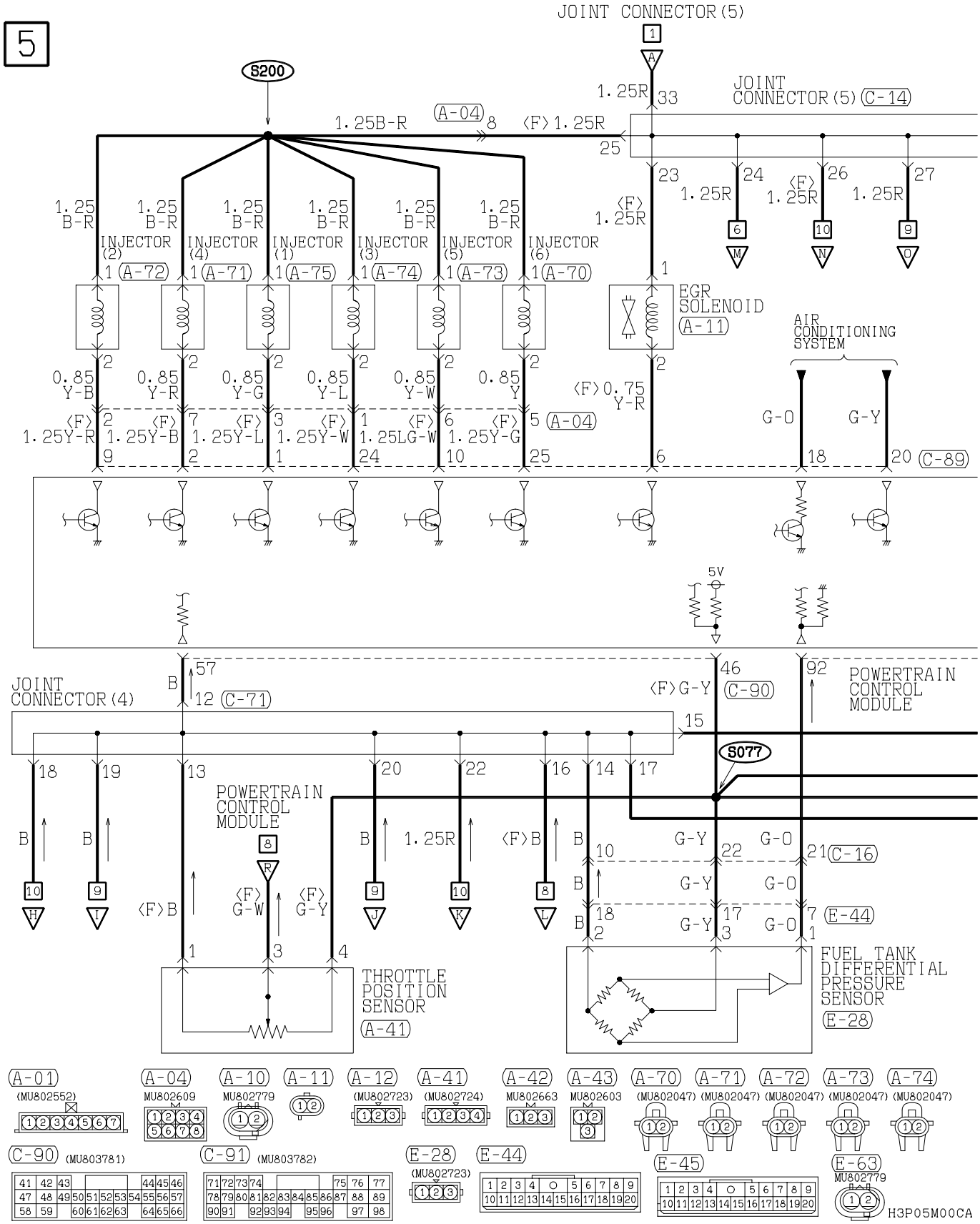

TSB Revision

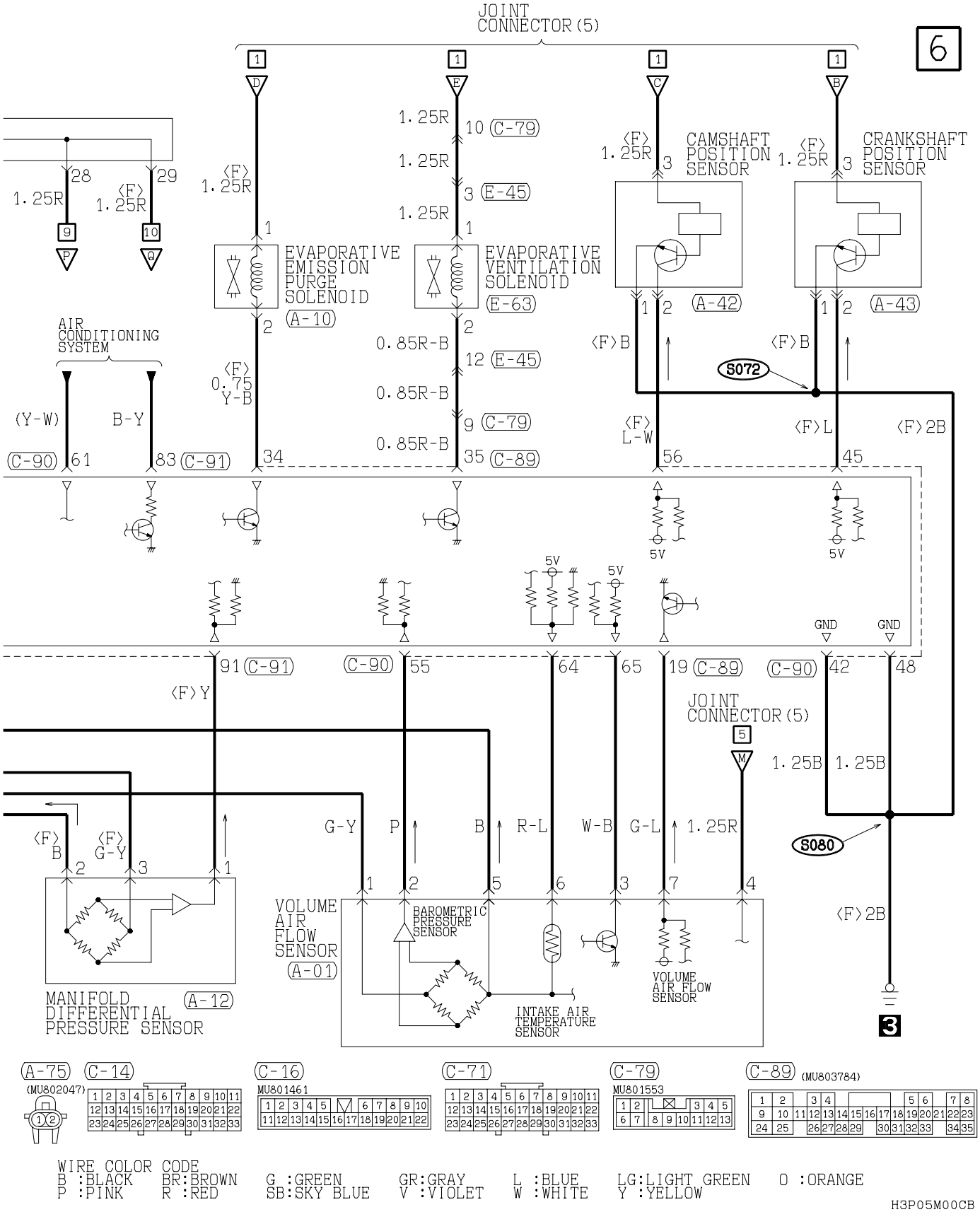

TSB Revision

MFI SYSTEM (CONTINUED)

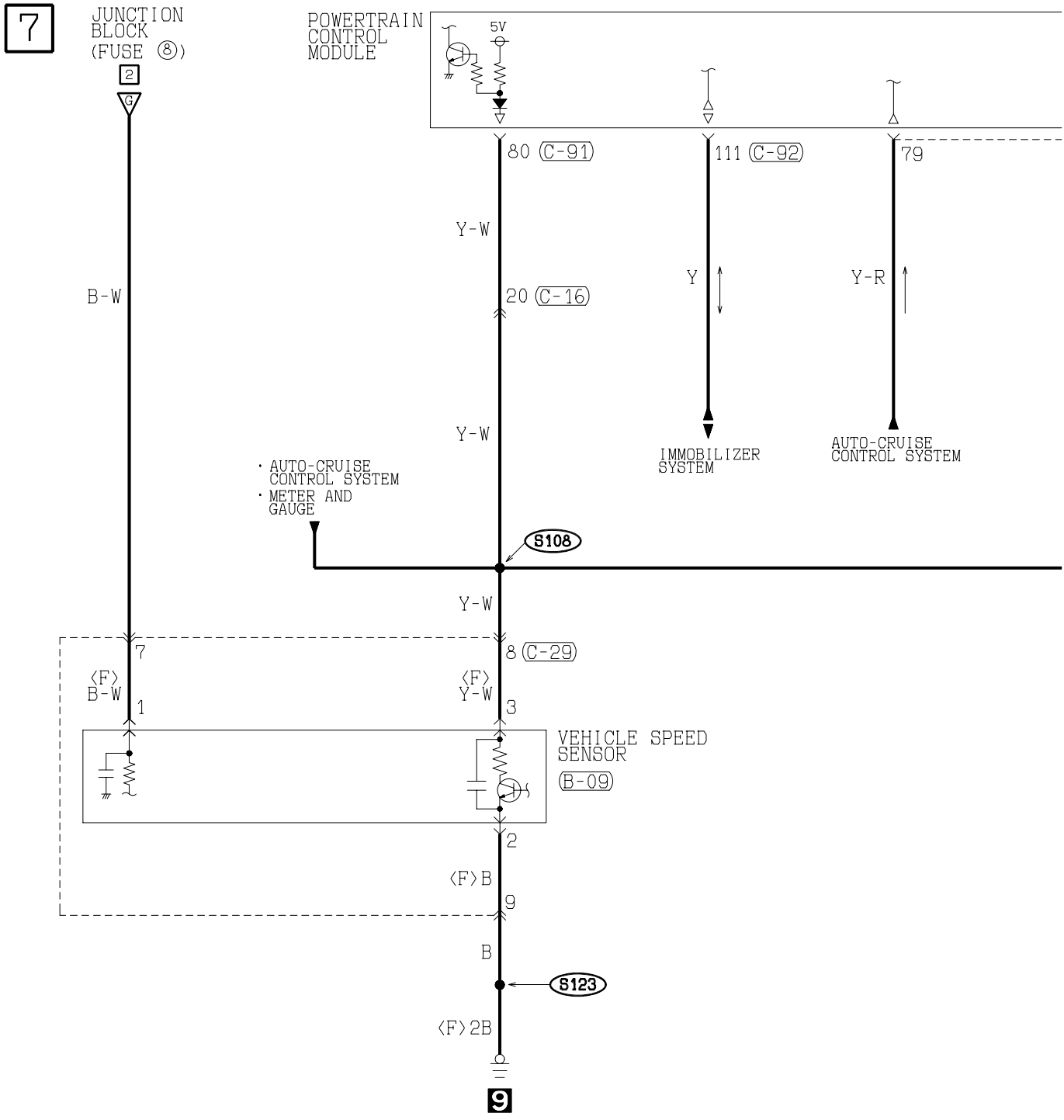

H3P05M00DA

TSB Revision

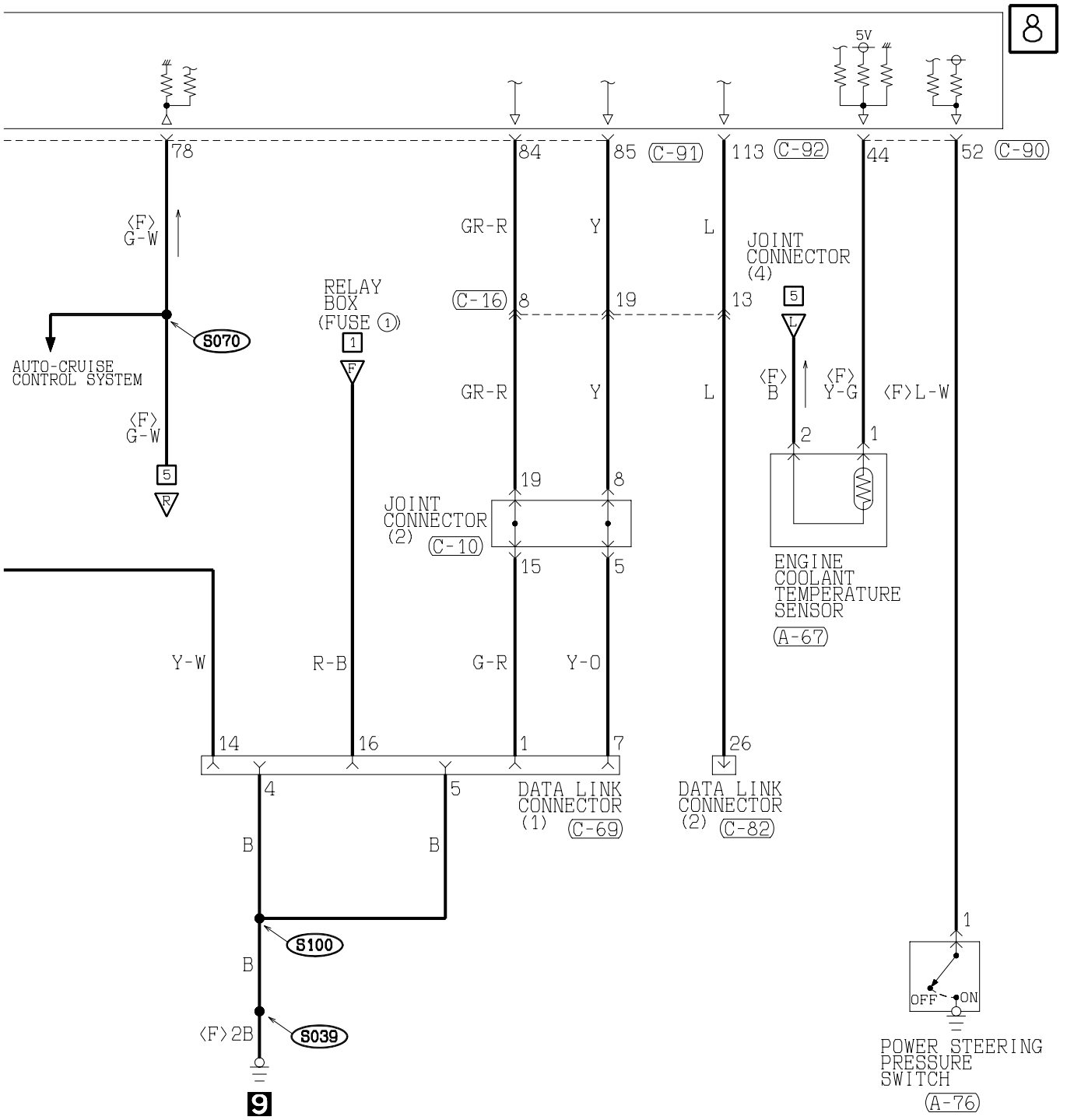

(C-90) (MU803781)

41	42	43						44	45	46		
47	48	49	50	51	52	53	54	55	56	57		
58	59		60	61	62	63		64	65	66		

(C-91) (MU803782)

71	72	73	74					75	76	77		
78	79	80	81	82	83	84	85	86	87	88	89	
90	91		92	93	94		95	96		97	98	

(C-92) (MU803783)

101	102		103	104				105	106	107		
108	109	110	111	112	113	114	115	116	117	118	119	120
121	122	123		124	125		126	127	128		129	130

WIRE COLOR CODE
B :BLACK BR:BROWN G :GREEN GR:GRAY L :BLUE LG:LIGHT GREEN O :ORANGE
P :PINK R :RED SB:SKY BLUE V :VIOLET W :WHITE Y :YELLOW

H3P05M00DB

TSB Revision

MFI SYSTEM (CONTINUED)

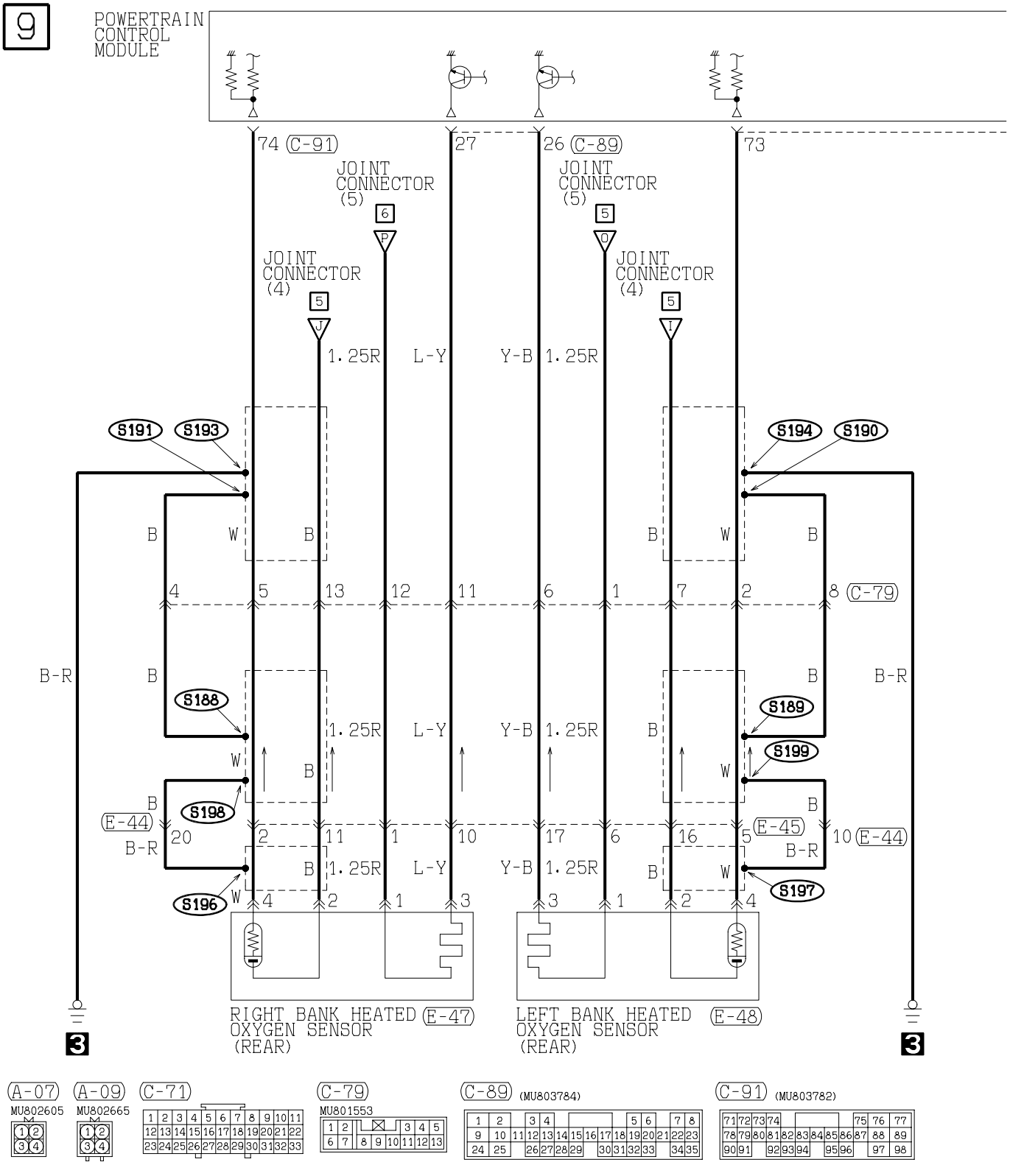

H3P05M00EA

TSB Revision

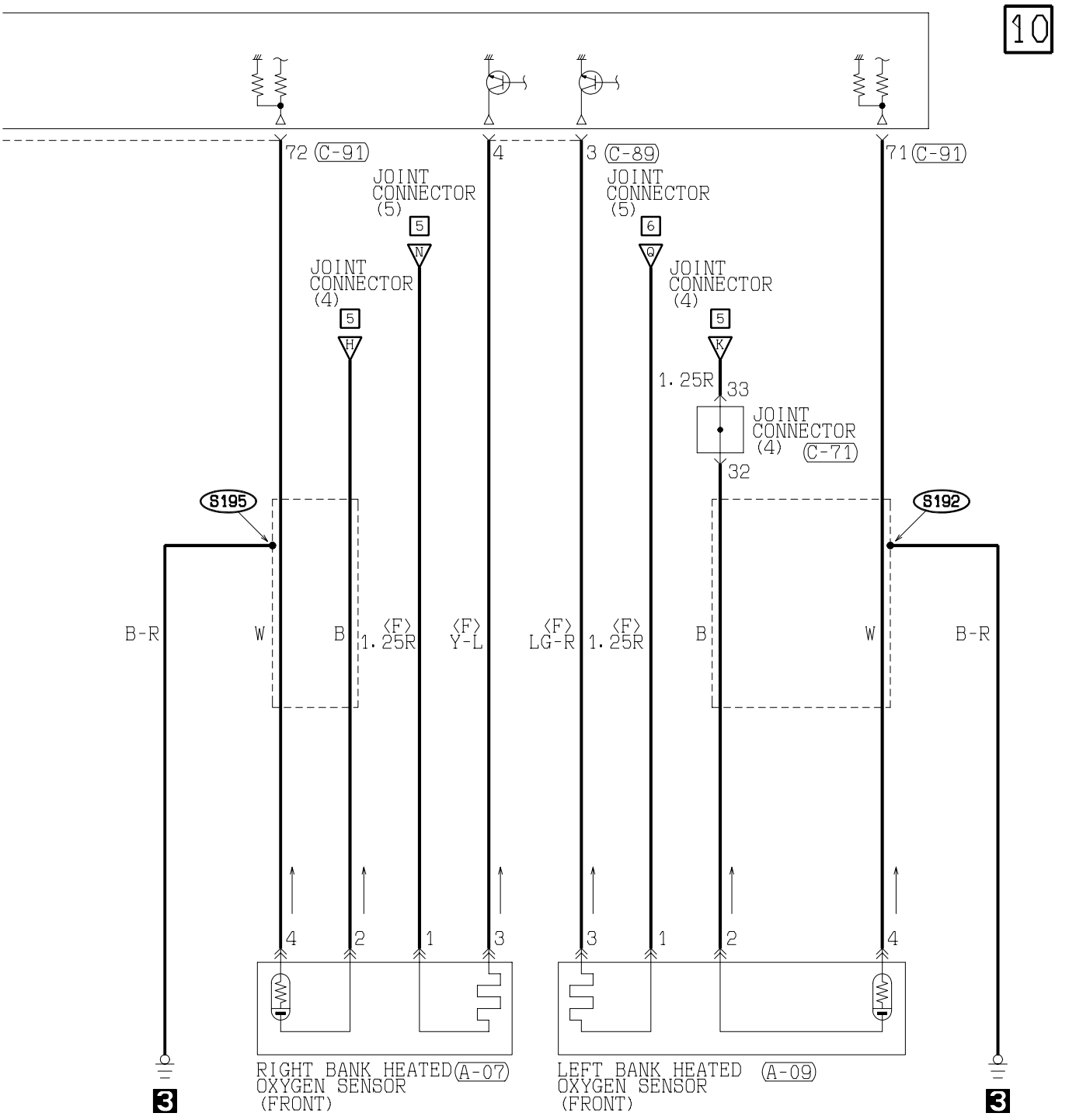

WIRE COLOR CODE

B :BLACK	BR:BROWN	G :GREEN	GR:GRAY	L :BLUE	LG:LIGHT GREEN	O :ORANGE	
P :PINK	R :RED	SB:SKY BLUE	V :VIOLET	W :WHITE	Y :YELLOW		

H3P05M00EB

TSB Revision

INVECS-II 4A/T

M1901016200636

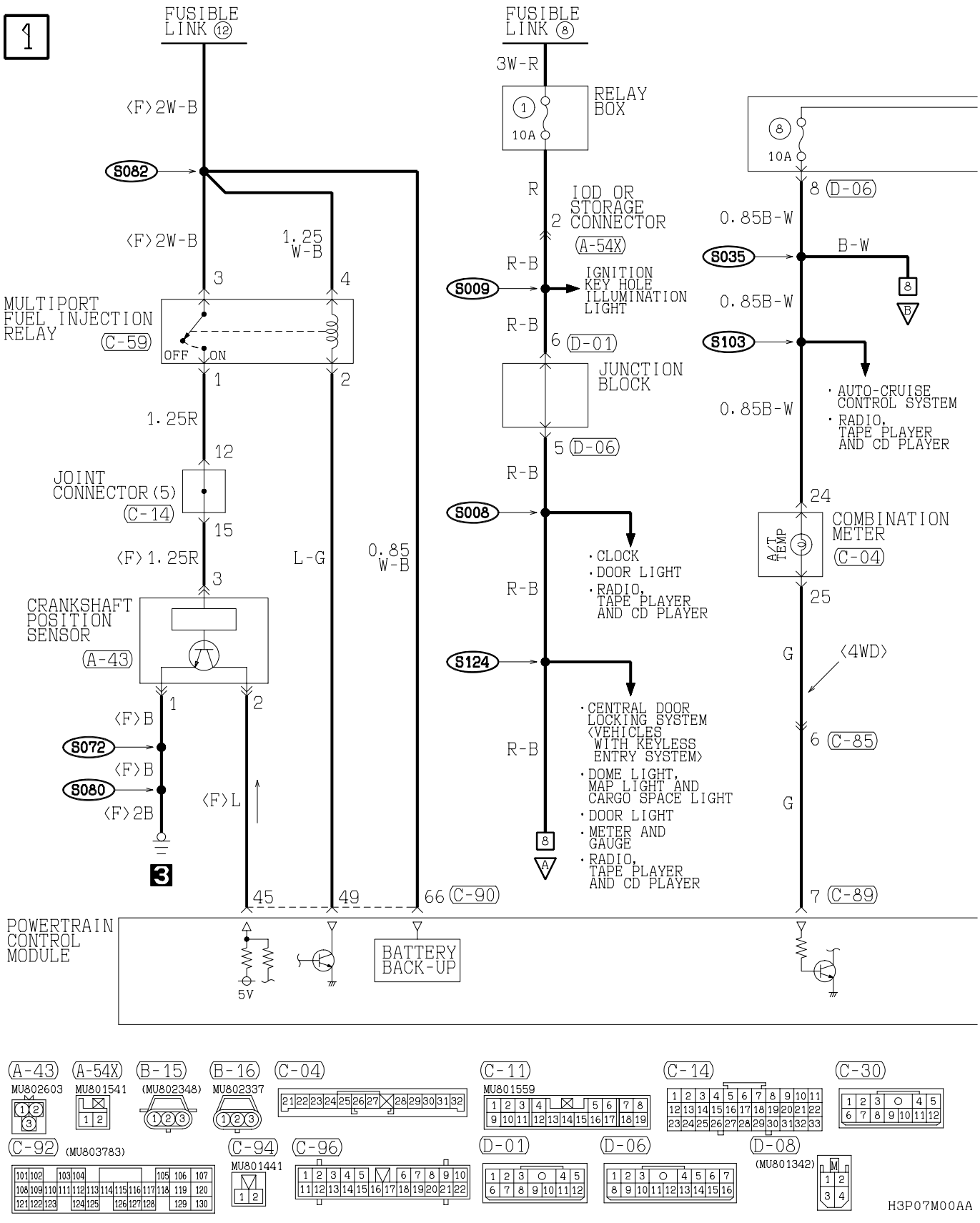

TSB Revision

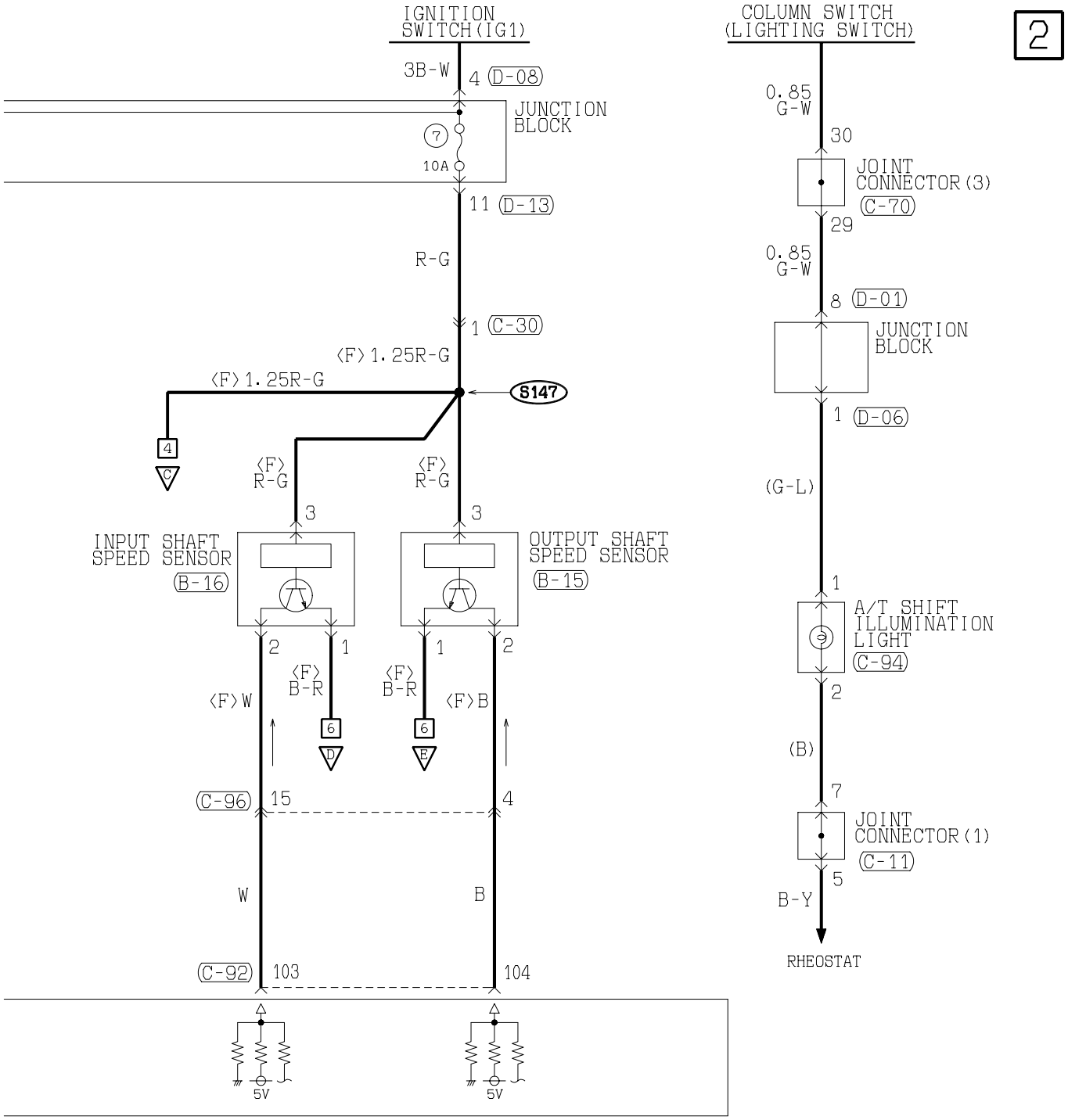

C-59

1	2
3	4

C-70

1	2	3	4	5	6	7	8	9	10	11
12	13	14	15	16	17	18	19	20	21	22
23	24	25	26	27	28	29	30	31	32	33

C-85 MU801551

1	2					3	4	
5	6	7	8	9	10	11		

C-89 (MU803784)

1	2			3	4							5	6		7	8								
9	10	11	12	13	14	15	16	17	18	19	20	21	22	23										
24	25		26	27	28	29			30	31	32	33			34	35								

C-90 (MU803781)

41	42	43											44	45	46									
47	48	49	50	51	52	53	54	55	56	57														
58	59		60	61	62	63							64	65	66									

D-13

1	2	3	4		5	6	7	8	9
10	11	12	13	14	15	16	17	18	19	20

WIRE COLOR CODE

B :BLACK	LG:LIGHT GREEN	G :GREEN	L :BLUE
BR:BROWN	O :ORANGE	GR:GRAY	R :RED
W :WHITE	SB:SKY BLUE	P :PINK	Y :YELLOW
V :VIOLET			

H3P07M00AB

TSB Revision

INVECS-II 4A/T (CONTINUED)

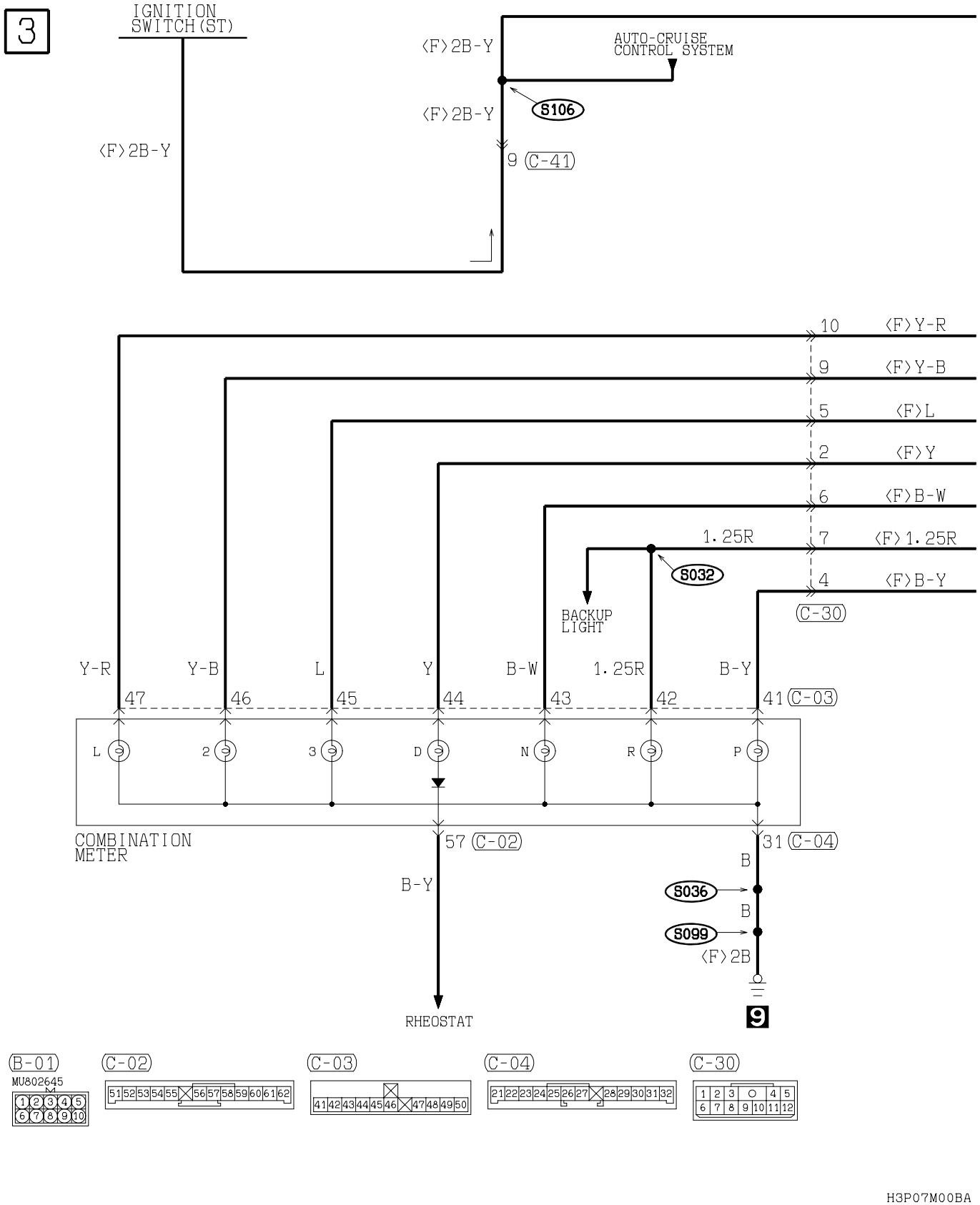

H3P07M00BA

TSB Revision

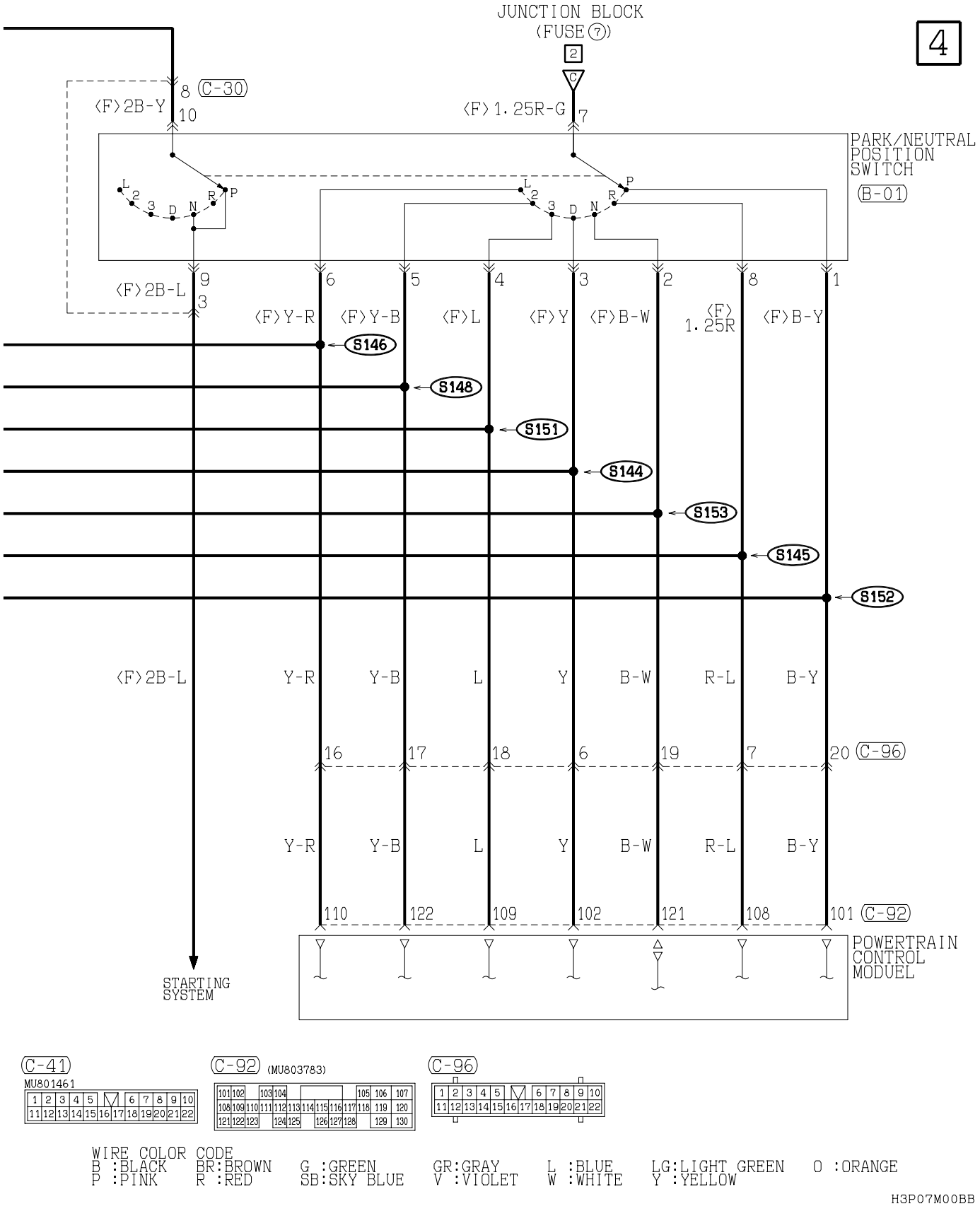

WIRE COLOR CODE

B :BLACK	BR:BROWN	G :GREEN	GR:GRAY	L :BLUE	LG:LIGHT GREEN	O :ORANGE
P :PINK	R :RED	SB:SKY BLUE	V :VIOLET	W :WHITE	Y :YELLOW	

H3P07M00BB

TSB Revision

INVECS-II 4A/T (CONTINUED)

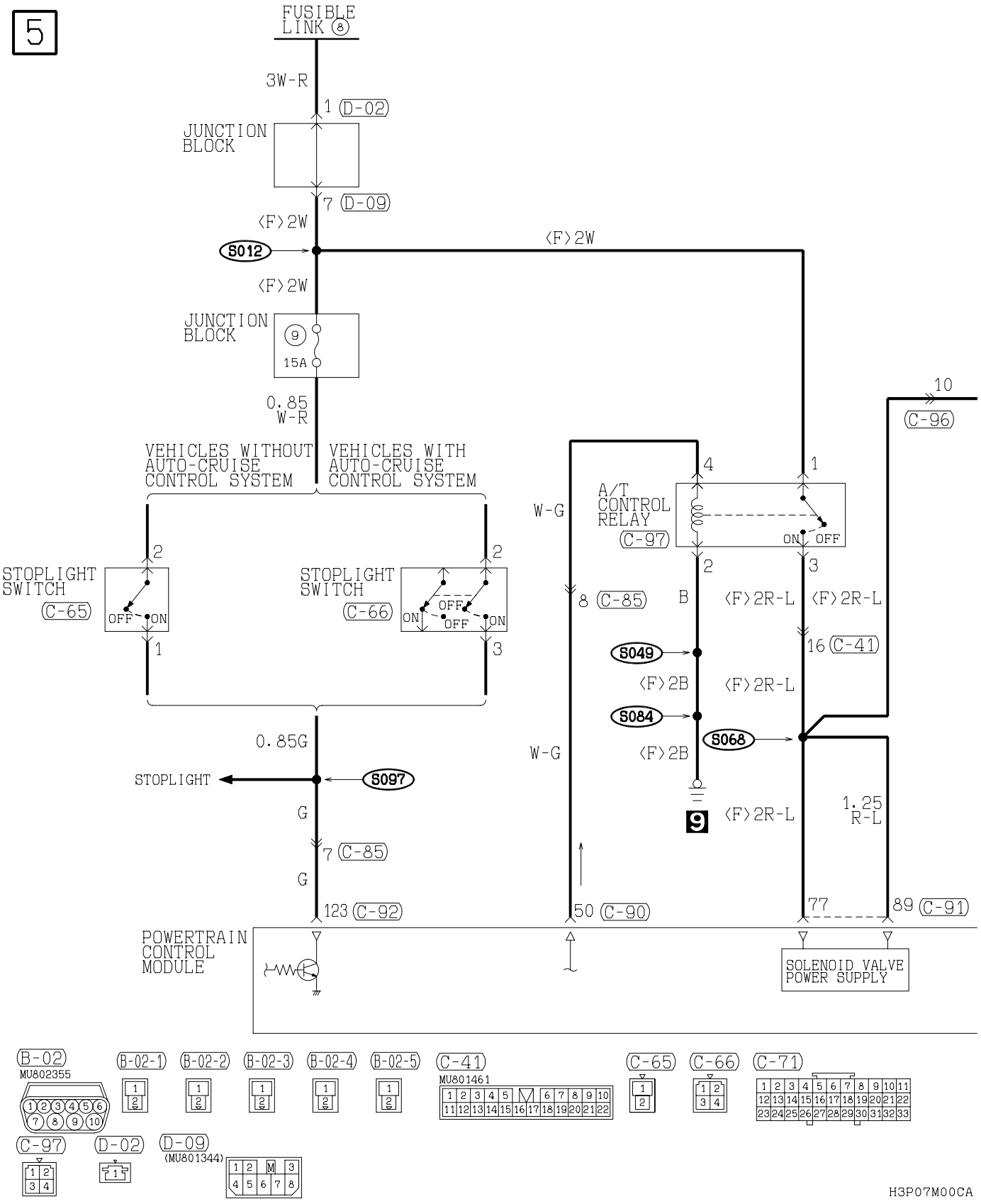

TSB Revision

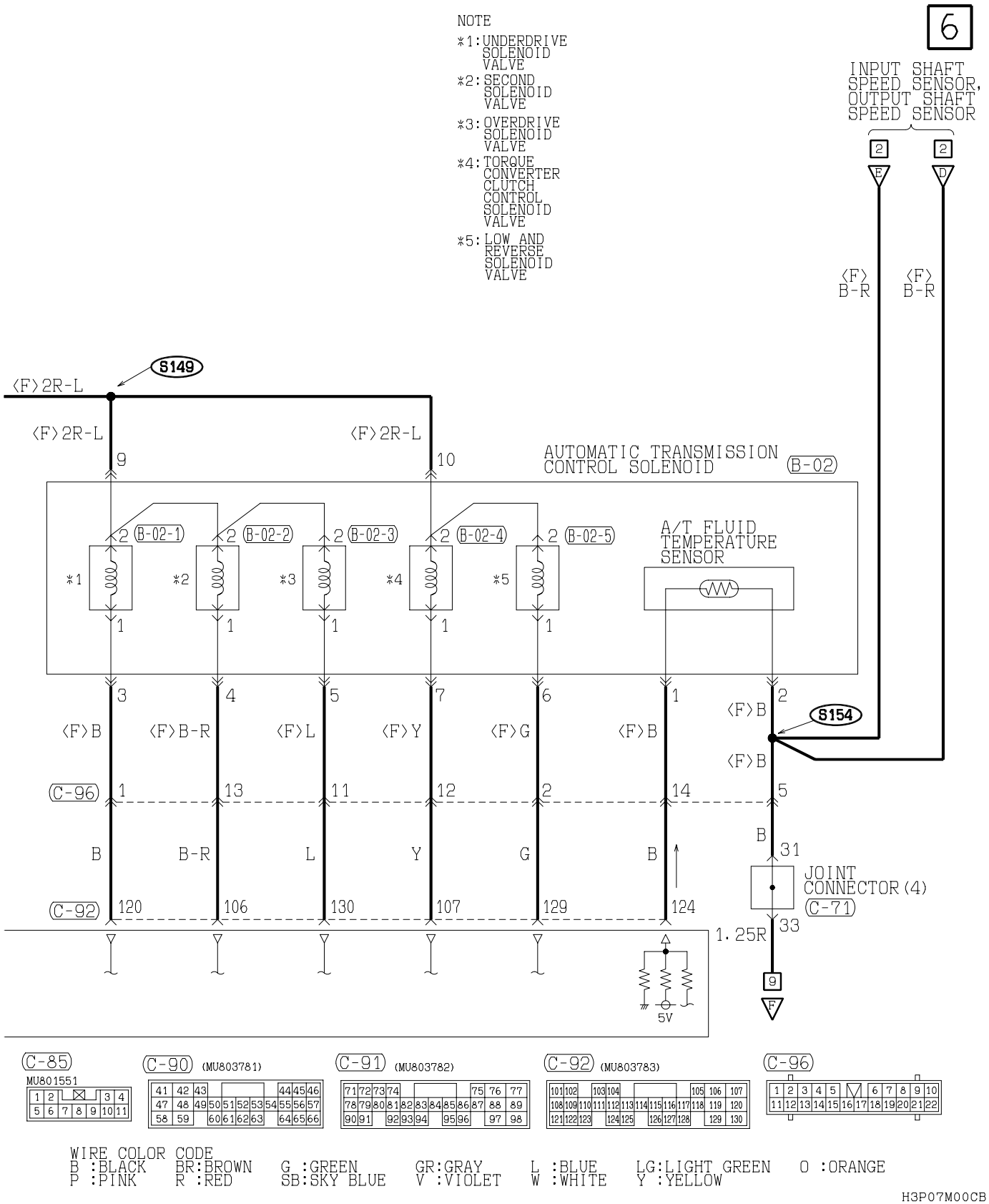

WIRE COLOR CODE

B :BLACK	BR:BROWN	G :GREEN	GR:GRAY	L :BLUE	LG:LIGHT GREEN	O :ORANGE
P :PINK	R :RED	SB:SKY BLUE	V :VIOLET	W :WHITE	Y :YELLOW	

H3P07M00CB

TSB Revision

INVECS-II 4A/T (CONTINUED)

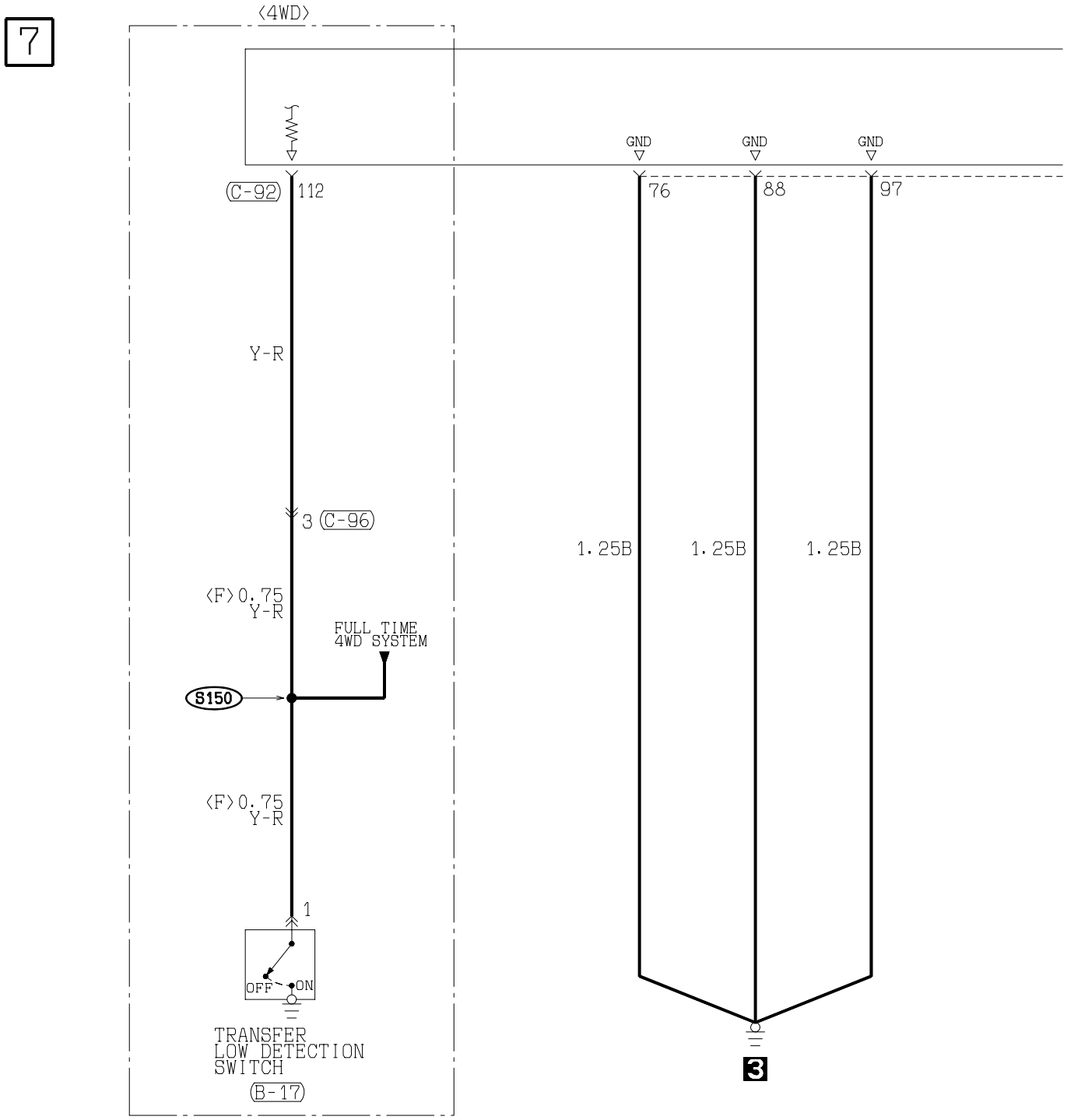

H3P07M00DA

TSB Revision

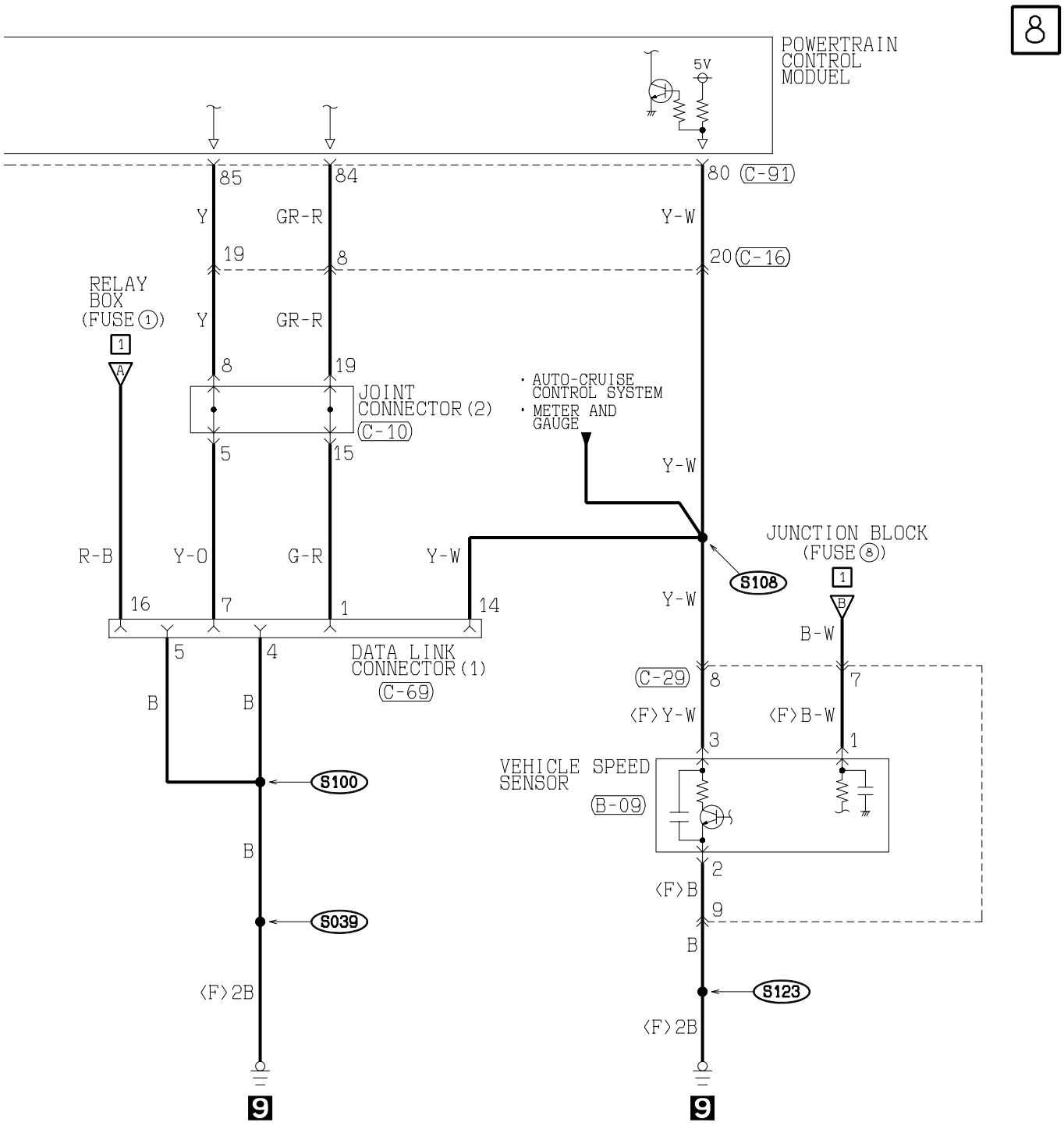

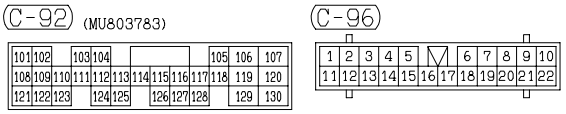

WIRE COLOR CODE

B :BLACK	BR:BROWN	G :GREEN	GR:GRAY	L :BLUE	LG:LIGHT GREEN	O :ORANGE
P :PINK	R :RED	SB:SKY BLUE	V :VIOLET	W :WHITE	Y :YELLOW	

H3P07M00DB

INVECS-II 4A/T (CONTINUED)

9

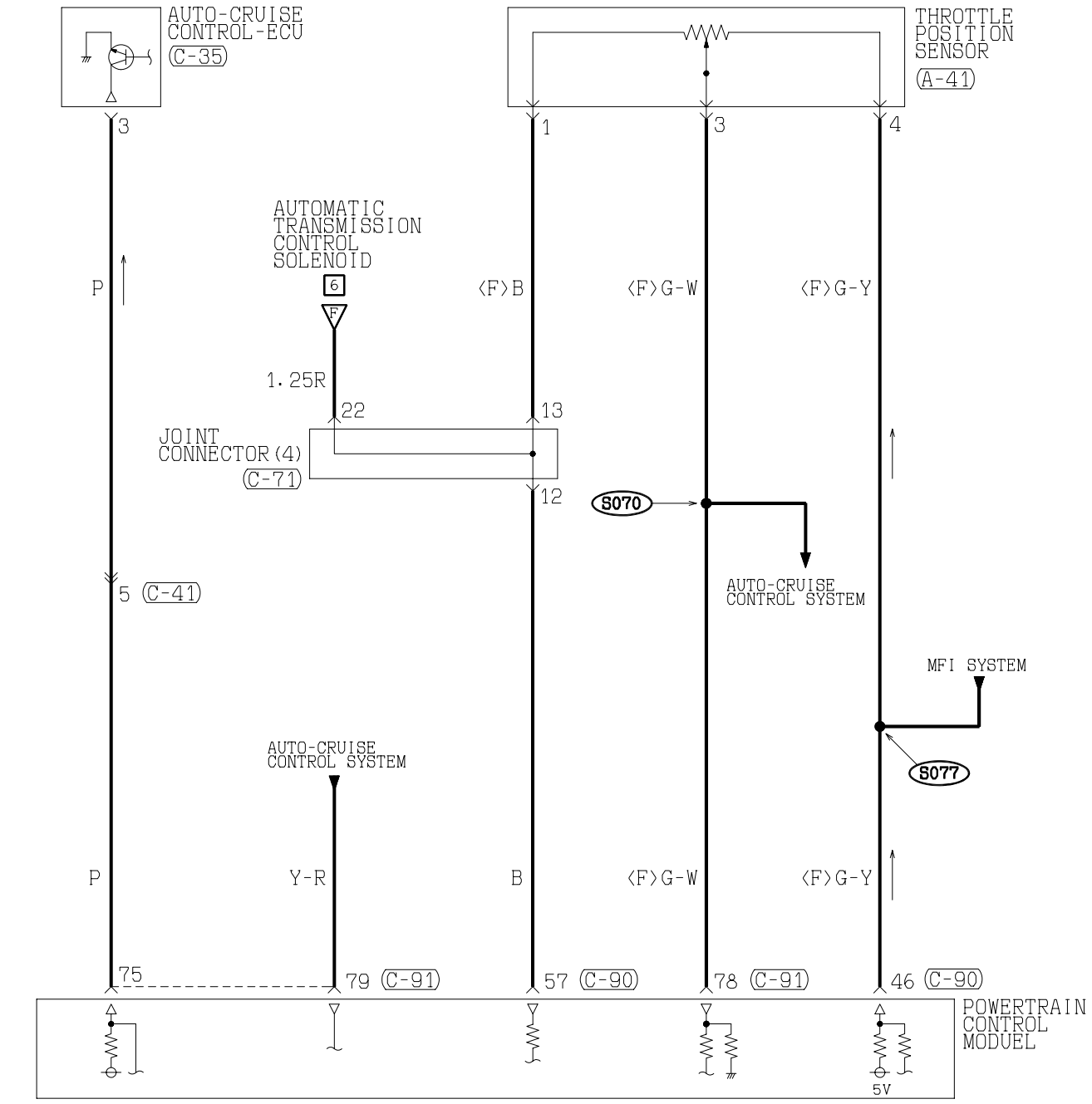

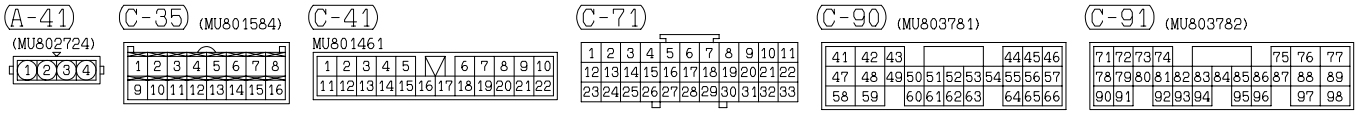

WIRE COLOR CODE

B :BLACK	BR:BROWN	G :GREEN	GR:GRAY	L :BLUE	LG:LIGHT GREEN	O :ORANGE
P :PINK	R :RED	SB:SKY BLUE	V :VIOLET	W :WHITE	Y :YELLOW	

H3P07M00EA

TSB Revision

NOTES

HEADLIGHT <VEHICLES FOR USA>

M1901001500493

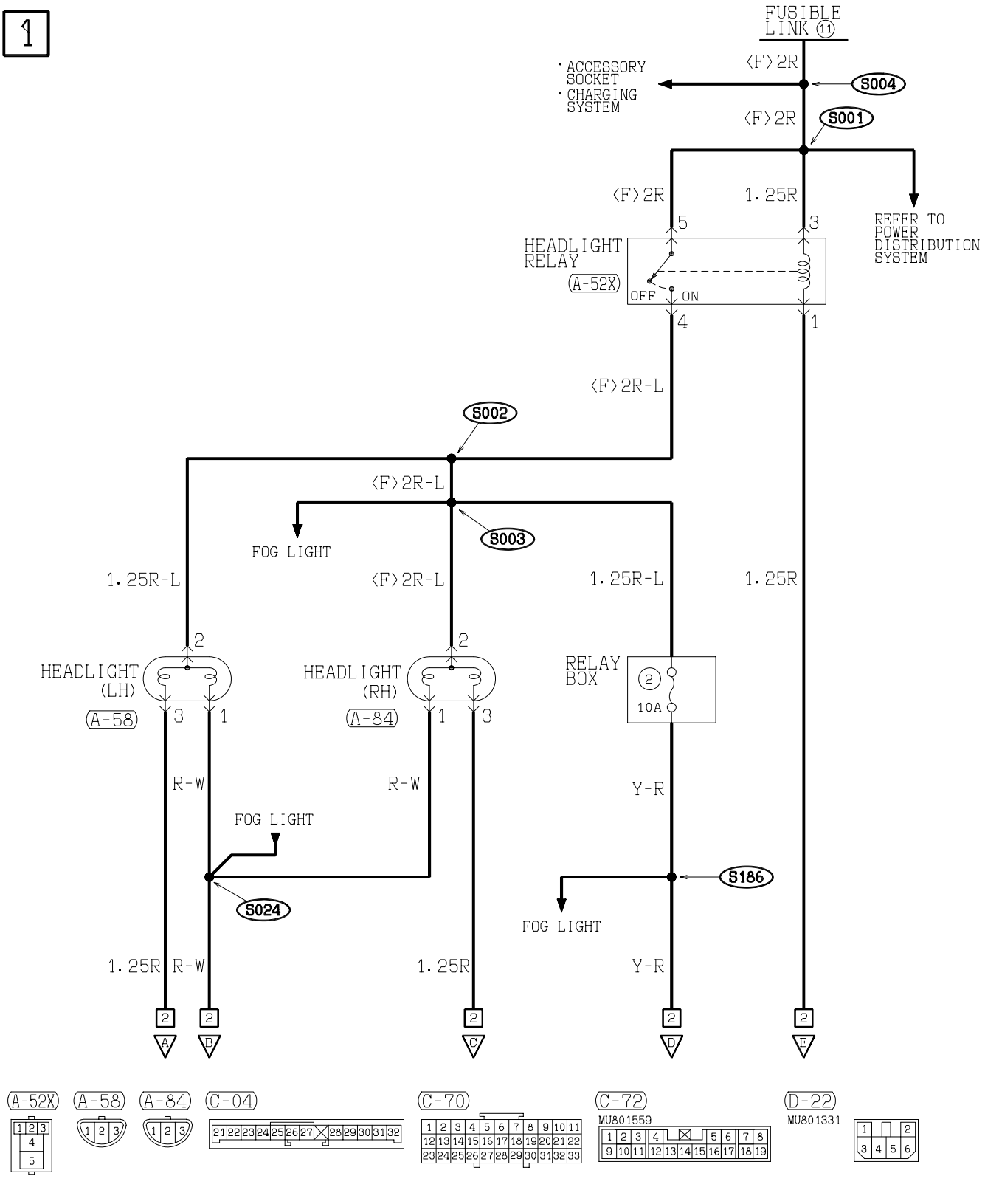

H3P08M00AA

TSB Revision

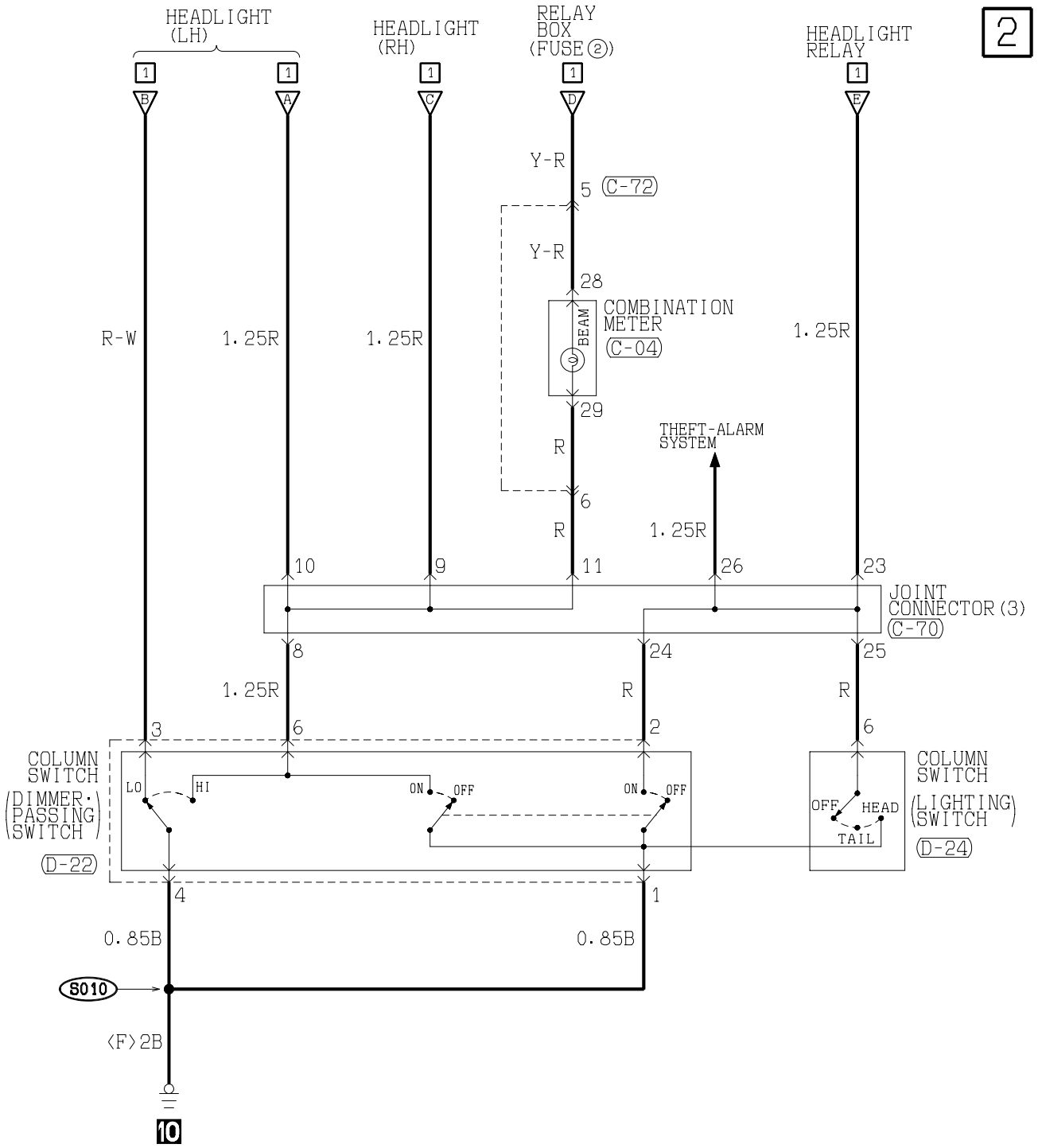

D-24

MU801451

1	2						3	4	
5	6	7	8	9	10				

WIRE COLOR CODE

B :BLACK	BR:BROWN	G :GREEN	GR:GRAY	L :BLUE	LG:LIGHT GREEN	O :ORANGE
P :PINK	R :RED	SB:SKY BLUE	V :VIOLET	W :WHITE	Y :YELLOW	

H3P08M00AB

TSB Revision

HEADLIGHT <VEHICLES FOR CANADA>

M1901001500501

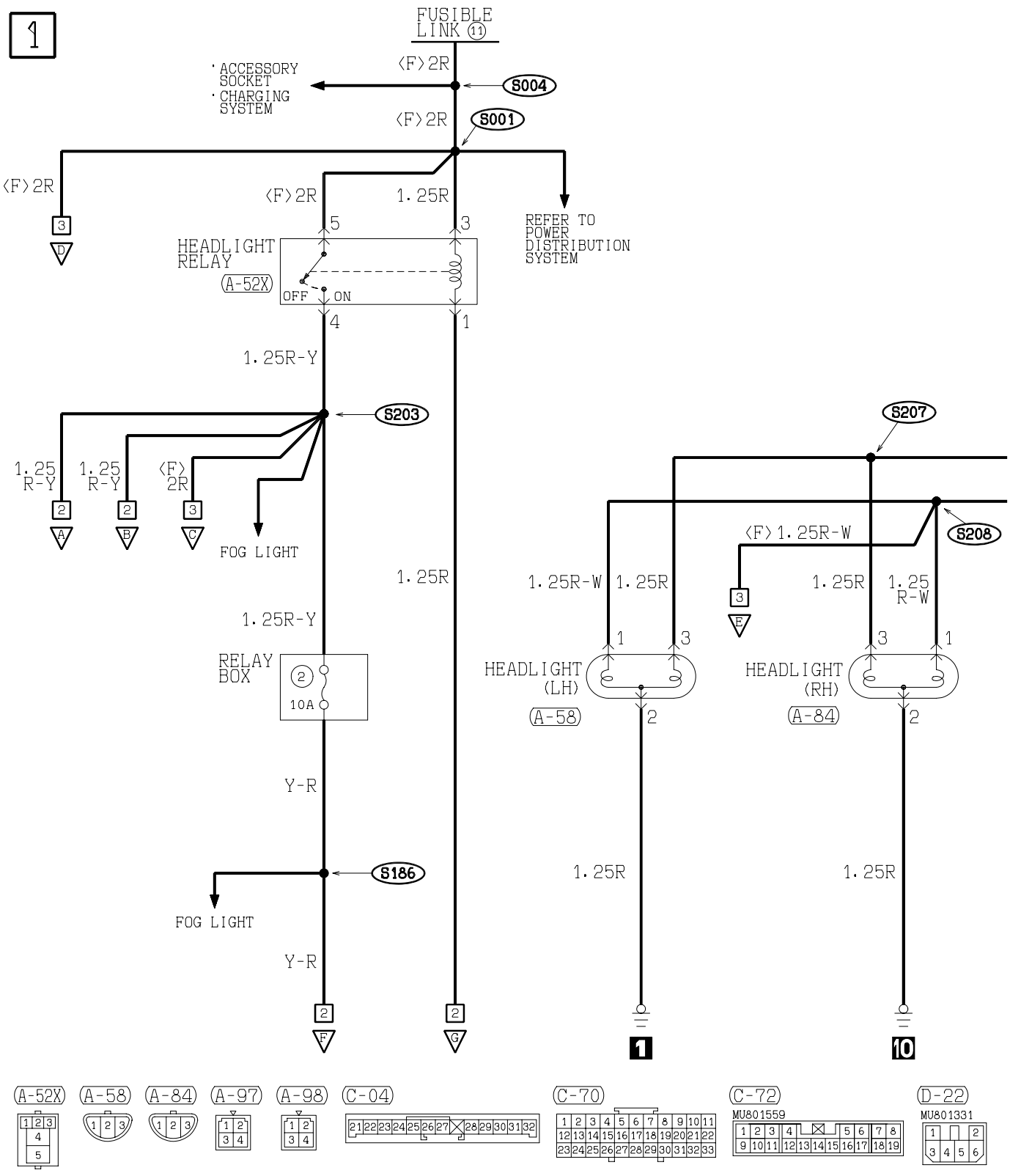

TSB Revision

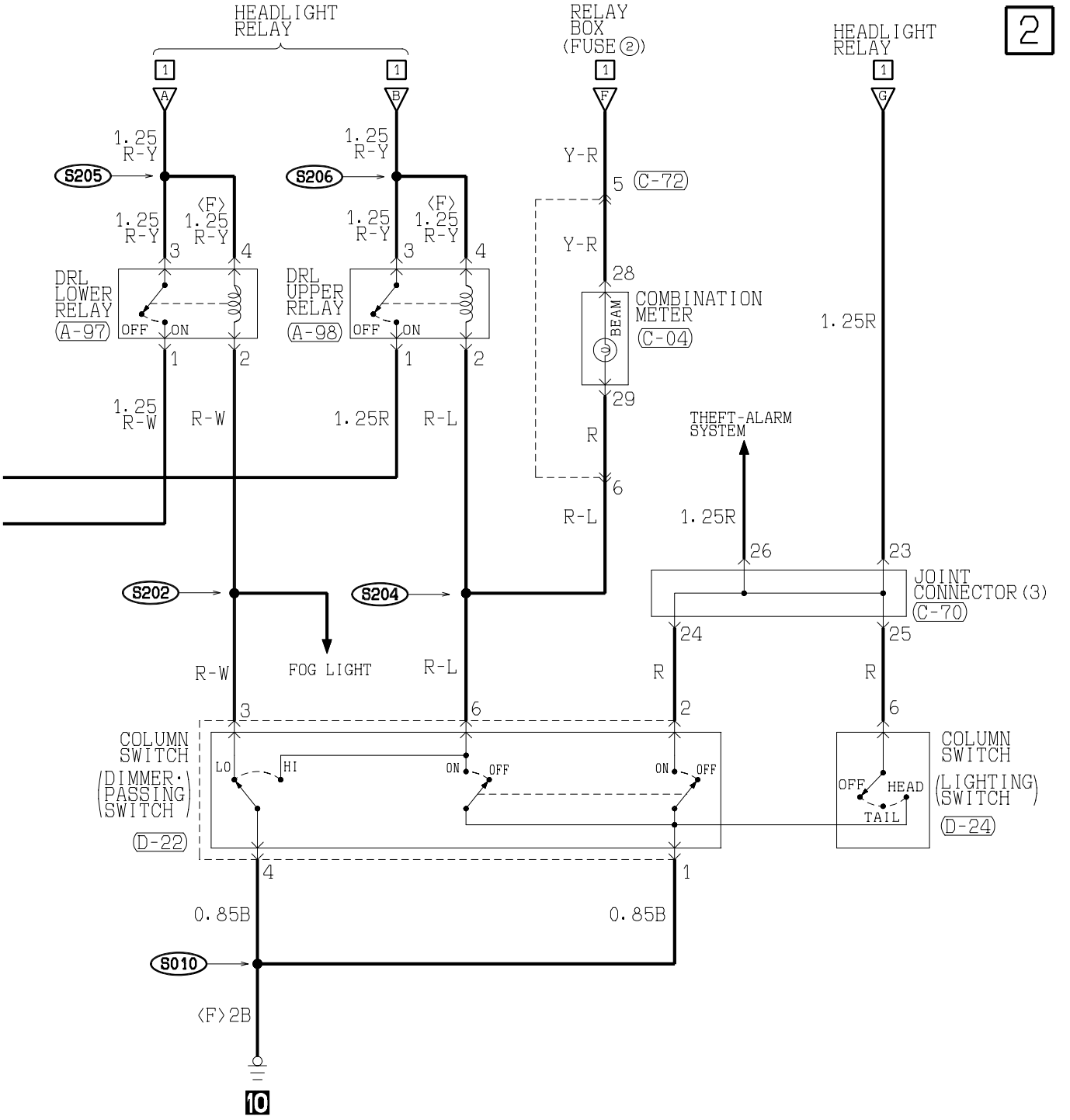

(D-24)

MU801451

1	2						3	4	
5	6	7	8	9	10				

WIRE COLOR CODE

B :BLACK	BR:BROWN	G :GREEN	GR:GRAY	L :BLUE	LG:LIGHT GREEN	O :ORANGE
P :PINK	R :RED	SB:SKY BLUE	V :VIOLET	W :WHITE	Y :YELLOW	

H3P08M09AB

HEADLIGHT <VEHICLES FOR CANADA> (CONTINUED)

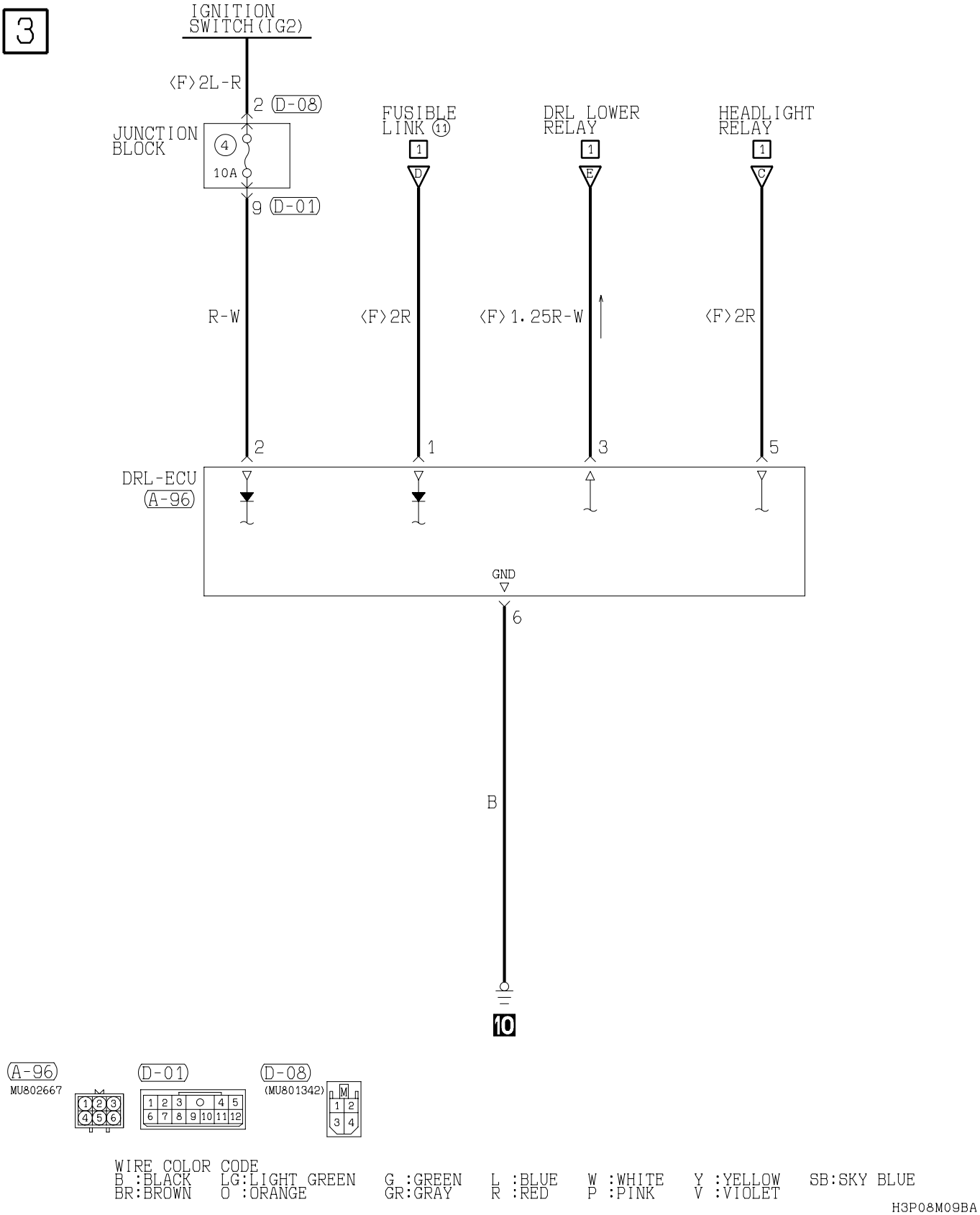

NOTES

TAILLIGHT, POSITION LIGHT AND LICENSE PLATE LIGHT

M1901016400221

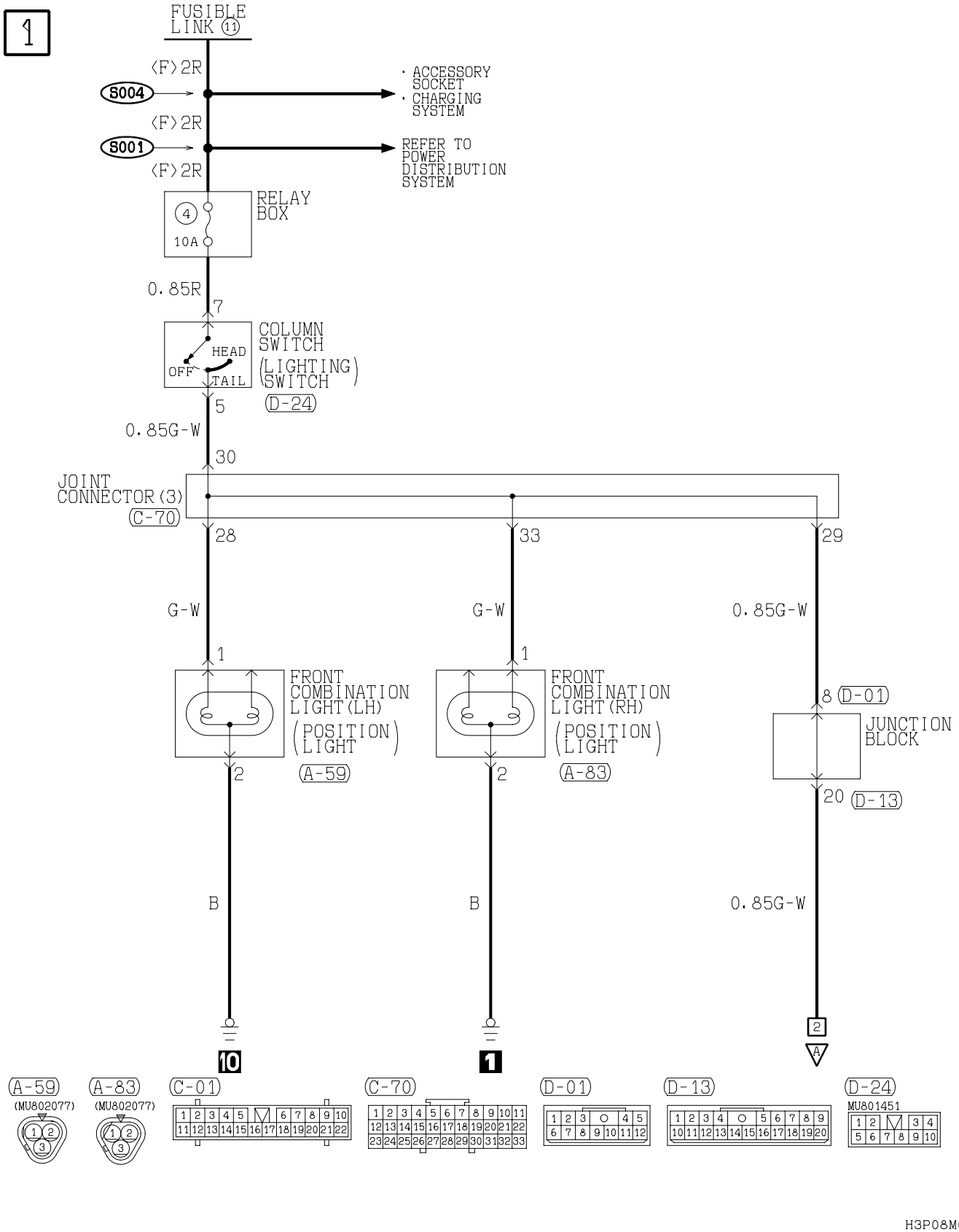

H3P08M01AA

TSB Revision

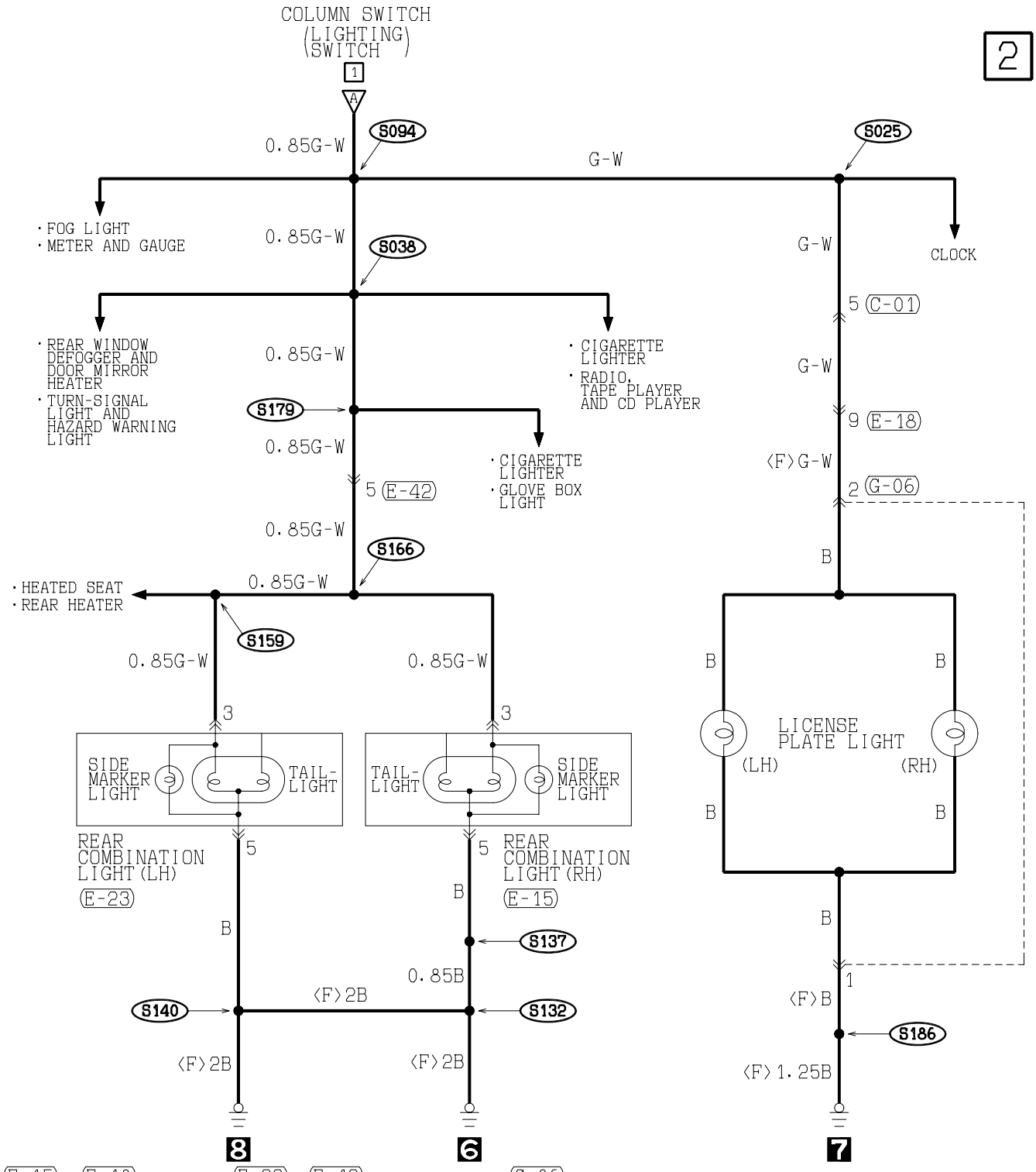

WIRE COLOR CODE

B :BLACK	BR:BROWN	G :GREEN	GR:GRAY	L :BLUE	LG:LIGHT GREEN	O :ORANGE	
P :PINK	R :RED	SB:SKY BLUE	V :VIOLET	W :WHITE	Y :YELLOW		

H3P08M01AB

TSB Revision

FOG LIGHT

M1901001800278

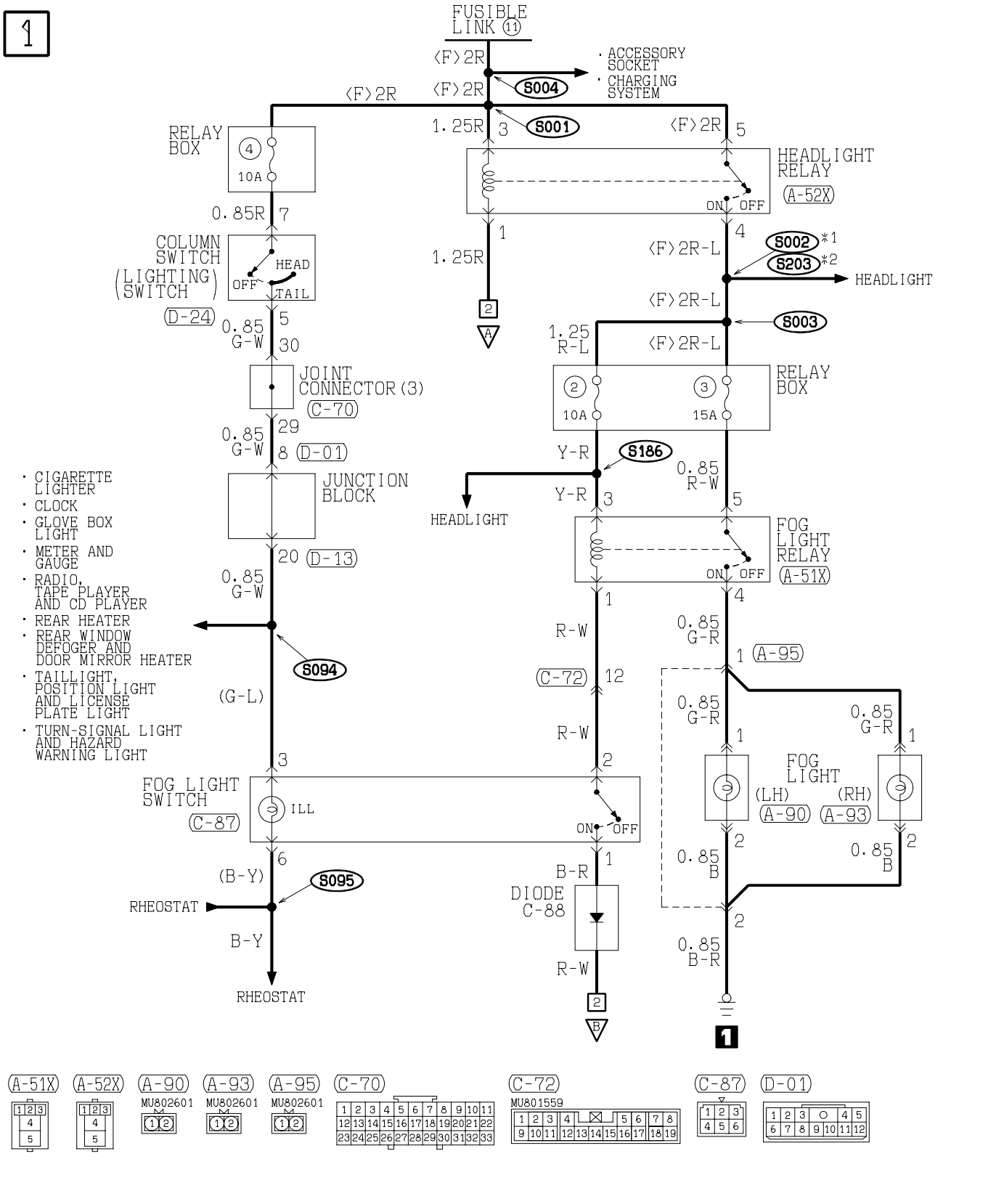

H3P08M02AA

TSB Revision

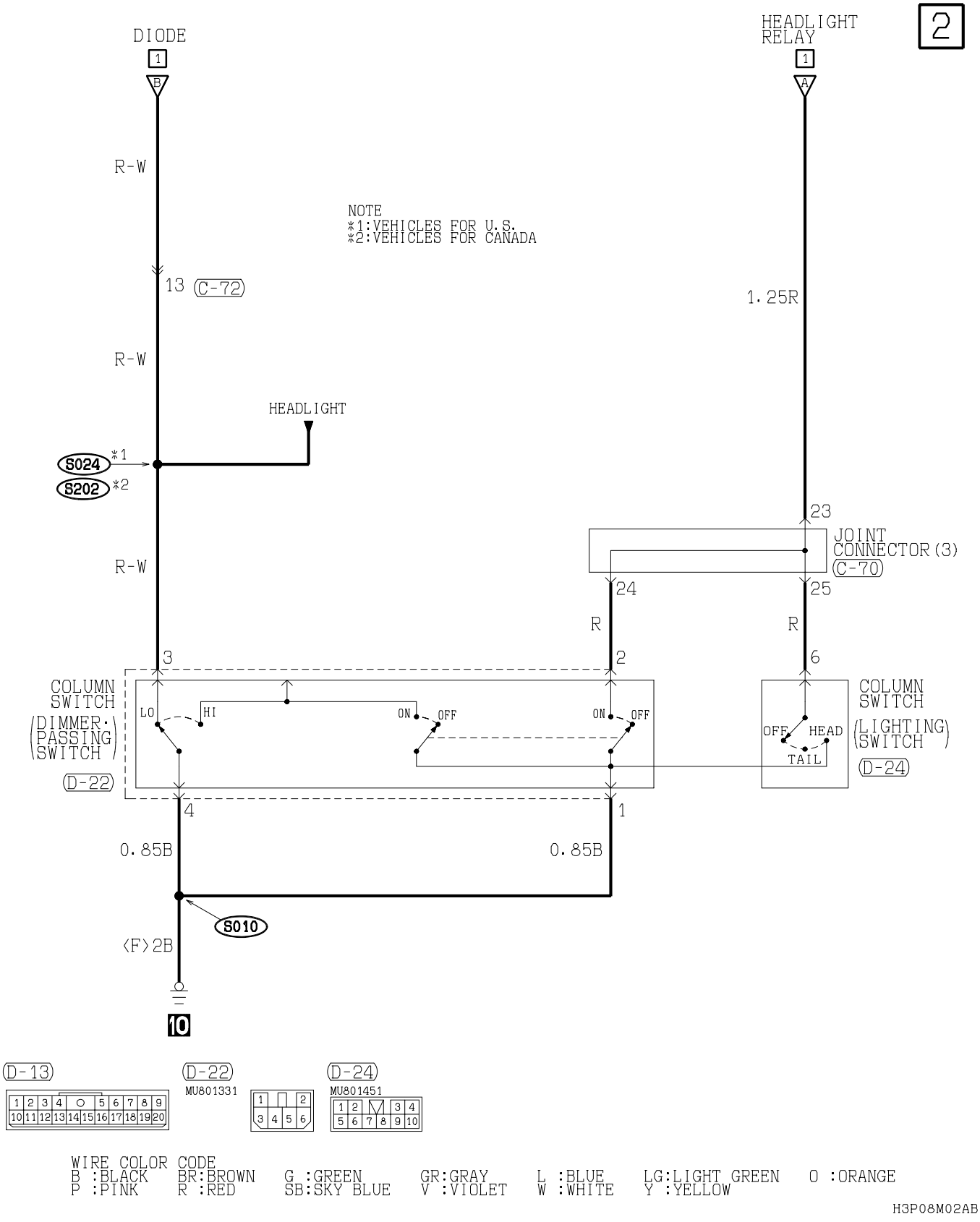

WIRE COLOR CODE

B :BLACK	BR:BROWN	G :GREEN	GR:GRAY	L :BLUE	LG:LIGHT GREEN	O :ORANGE
P :PINK	R :RED	SB:SKY BLUE	V :VIOLET	W :WHITE	Y :YELLOW	

H3P08M02AB

TSB Revision

DOME LIGHT, MAP LIGHT AND CARGO SPACE LIGHT <VEHICLES WITHOUT KEYLESS ENTRY SYSTEM>

M1901013800134

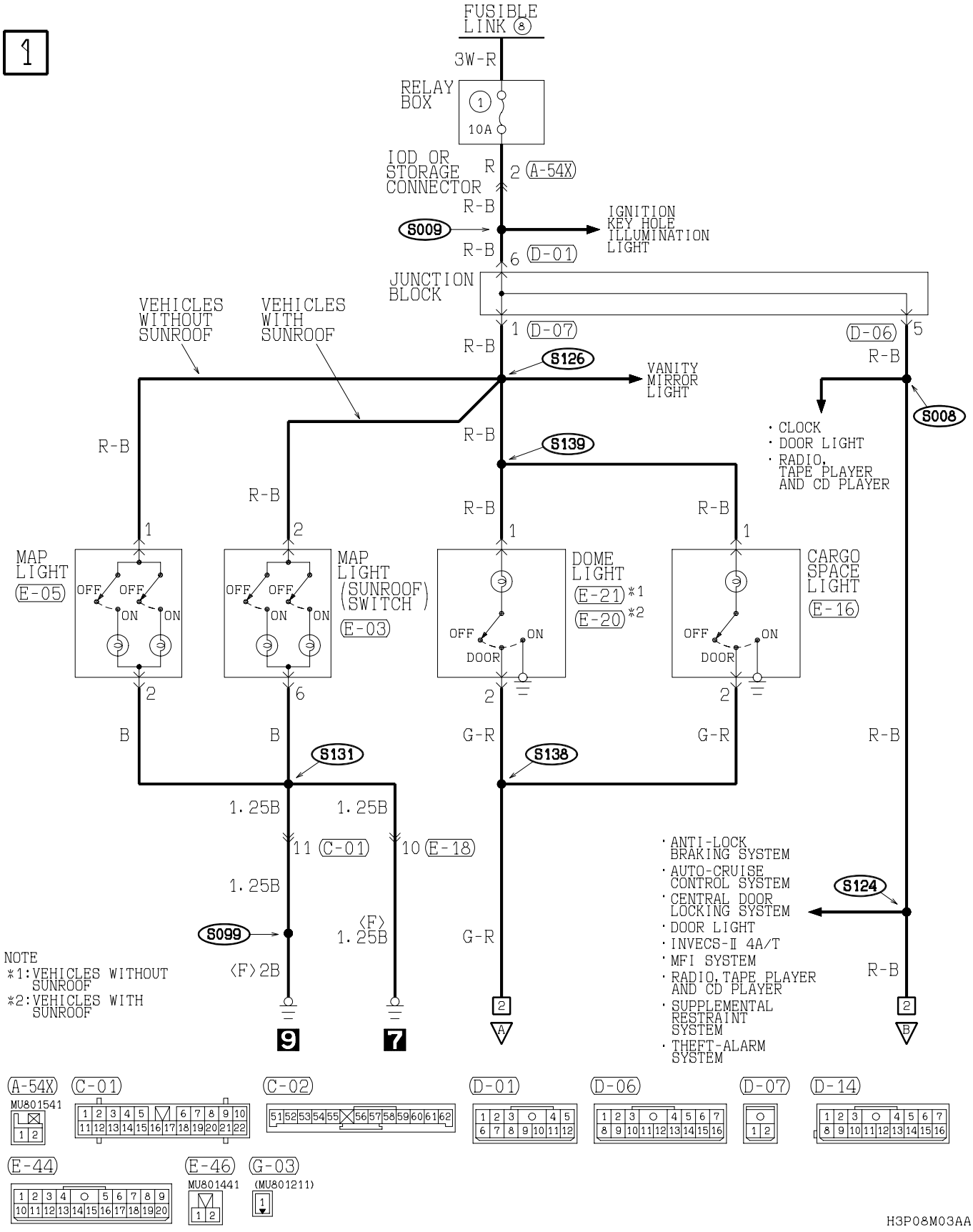

H3P08M03AA

TSB Revision

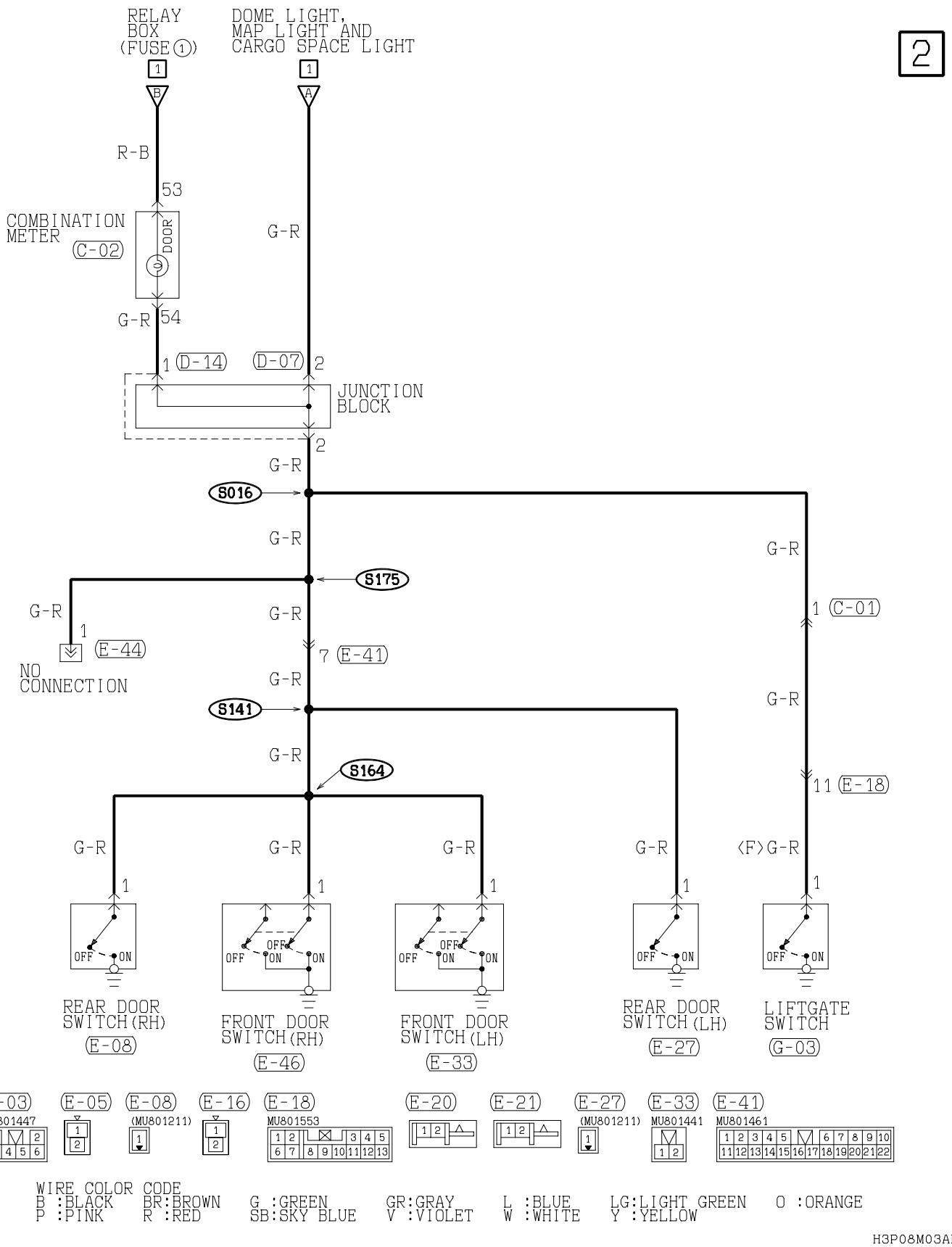

TSB Revision

DOME LIGHT, MAP LIGHT AND CARGO SPACE LIGHT <VEHICLES WITH KEYLESS ENTRY SYSTEM>

M1901013800145

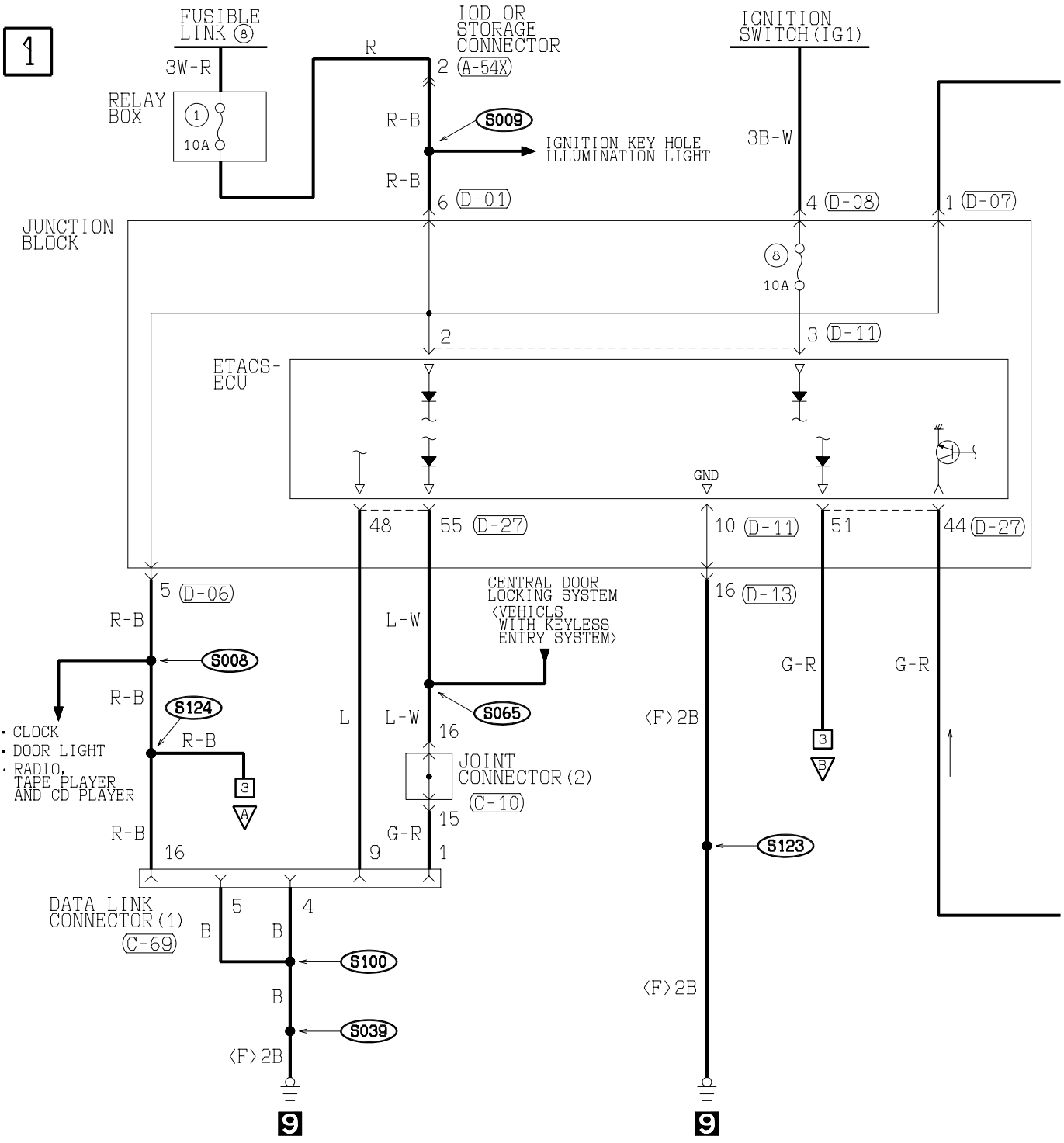

TSB Revision

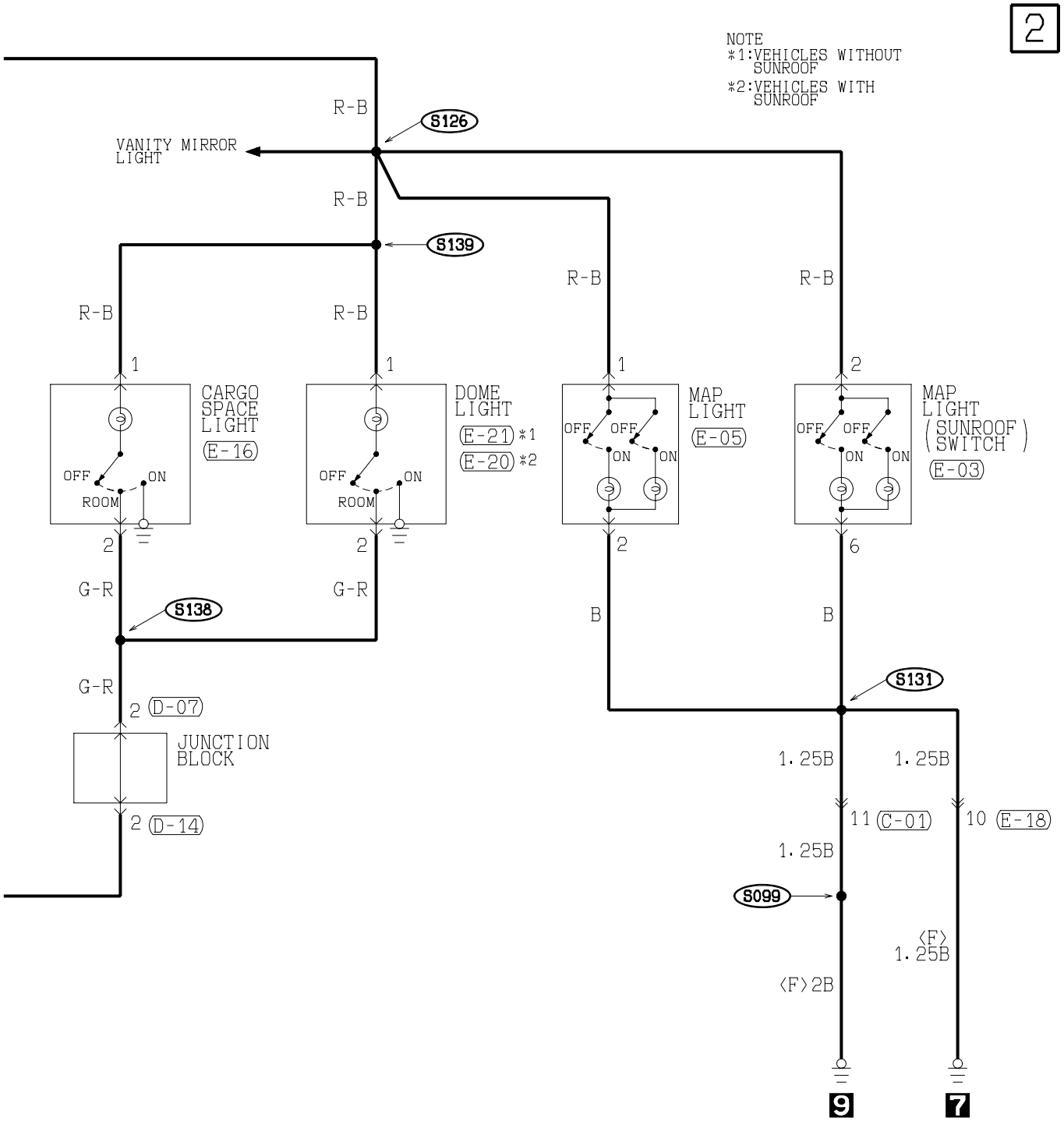

H3P08M04AB

TSB Revision

DOME LIGHT, MAP LIGHT AND CARGO SPACE LIGHT <VEHICLES WITH KEYLESS ENTRY SYSTEM> (CONTINUED)

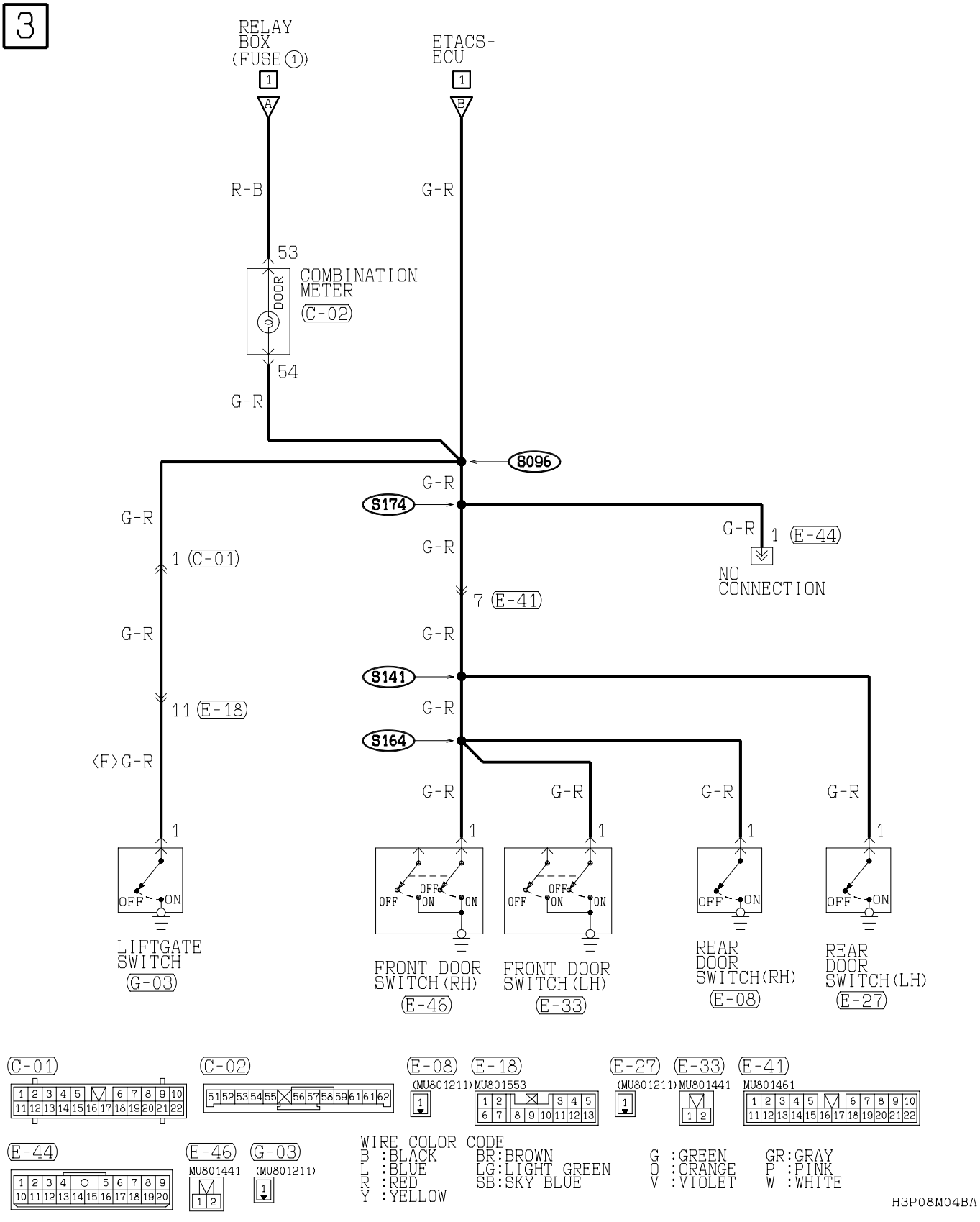

DOOR LIGHT

M1901002500184

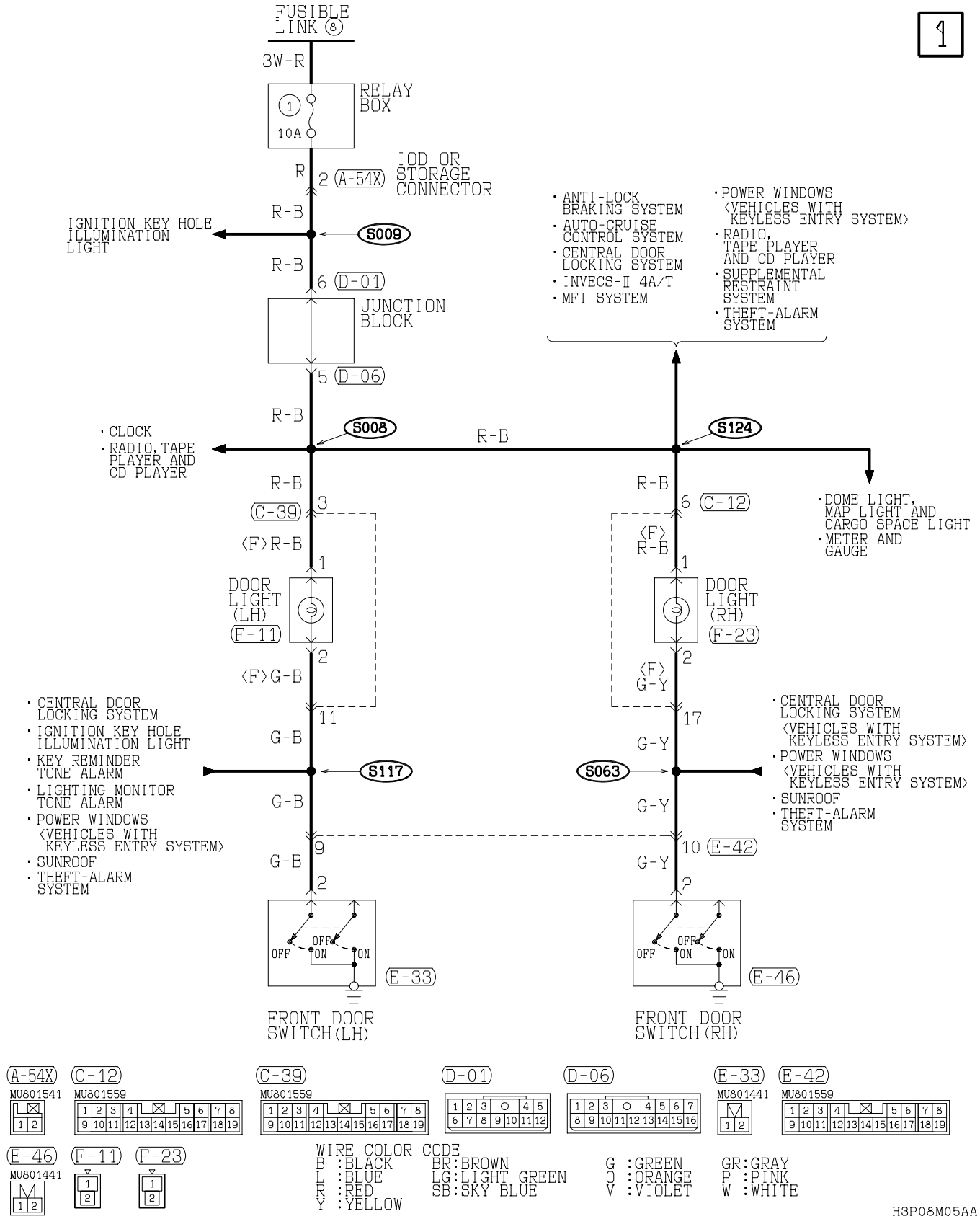

(A-54X) MU801541

(C-12) MU801559

(C-39) MU801559

(D-01)

(D-06)

(E-33) MU801441

(E-42) MU801559

(E-46) MU801441

(F-11)

(F-23)

WIRE COLOR CODE

B :BLACK	BR:BROWN	G :GREEN	GR:GRAY
L :BLUE	LG:LIGHT GREEN	O :ORANGE	P :PINK
R :RED	SB:SKY BLUE	V :VIOLET	W :WHITE
Y :YELLOW			

H3P08M05AA

TSB Revision

IGNITION KEY HOLE ILLUMINATION LIGHT

M1901002600181

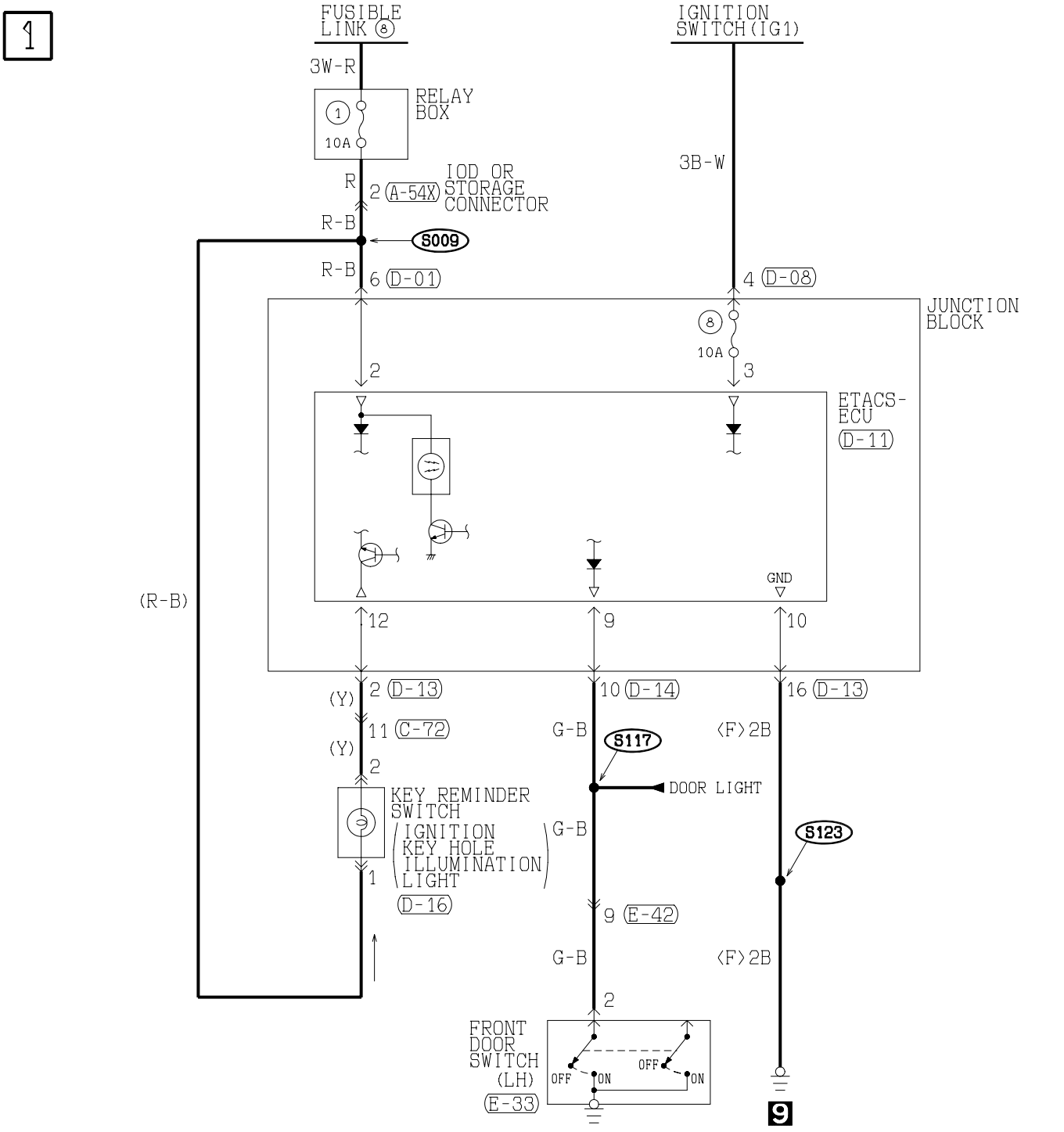

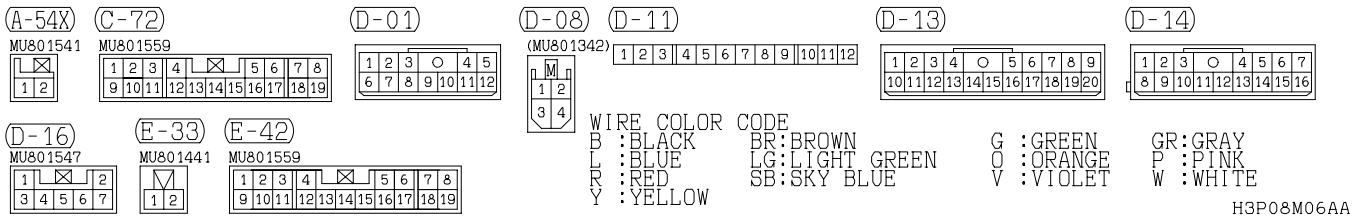

TSB Revision

VANITY MIRROR LIGHT

M1901002400262

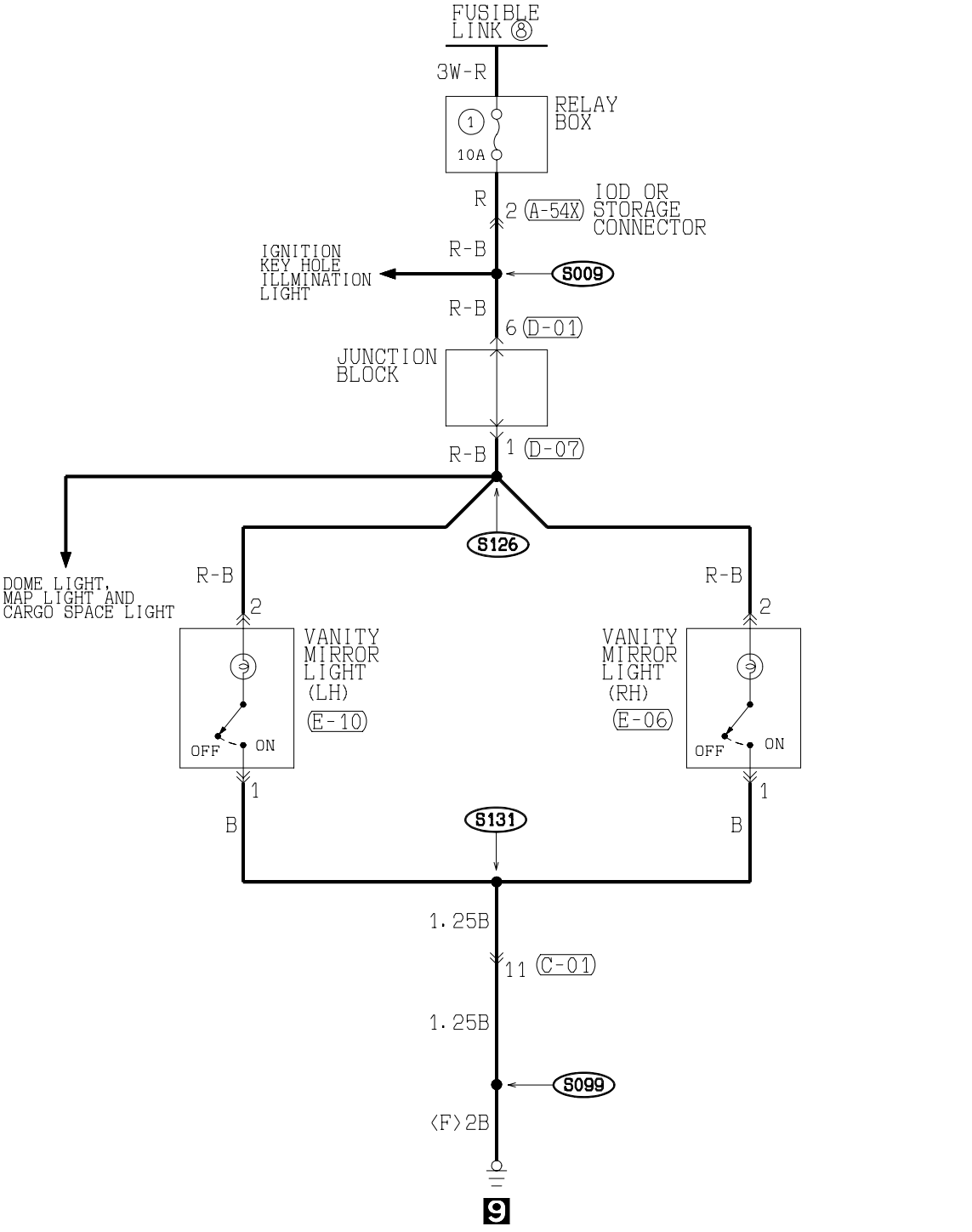

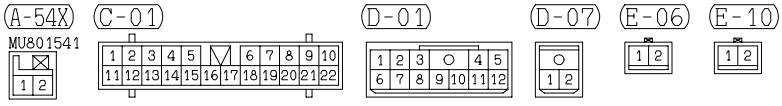

WIRE COLOR CODE

B :BLACK	BR:BROWN	G :GREEN	GR:GRAY	L :BLUE	LG:LIGHT GREEN	O :ORANGE
P :PINK	R :RED	SB:SKY BLUE	V :VIOLET	W :WHITE	Y :YELLOW	

H3P08M07AA

TSB Revision

GLOVE BOX LIGHT

M1901002200257

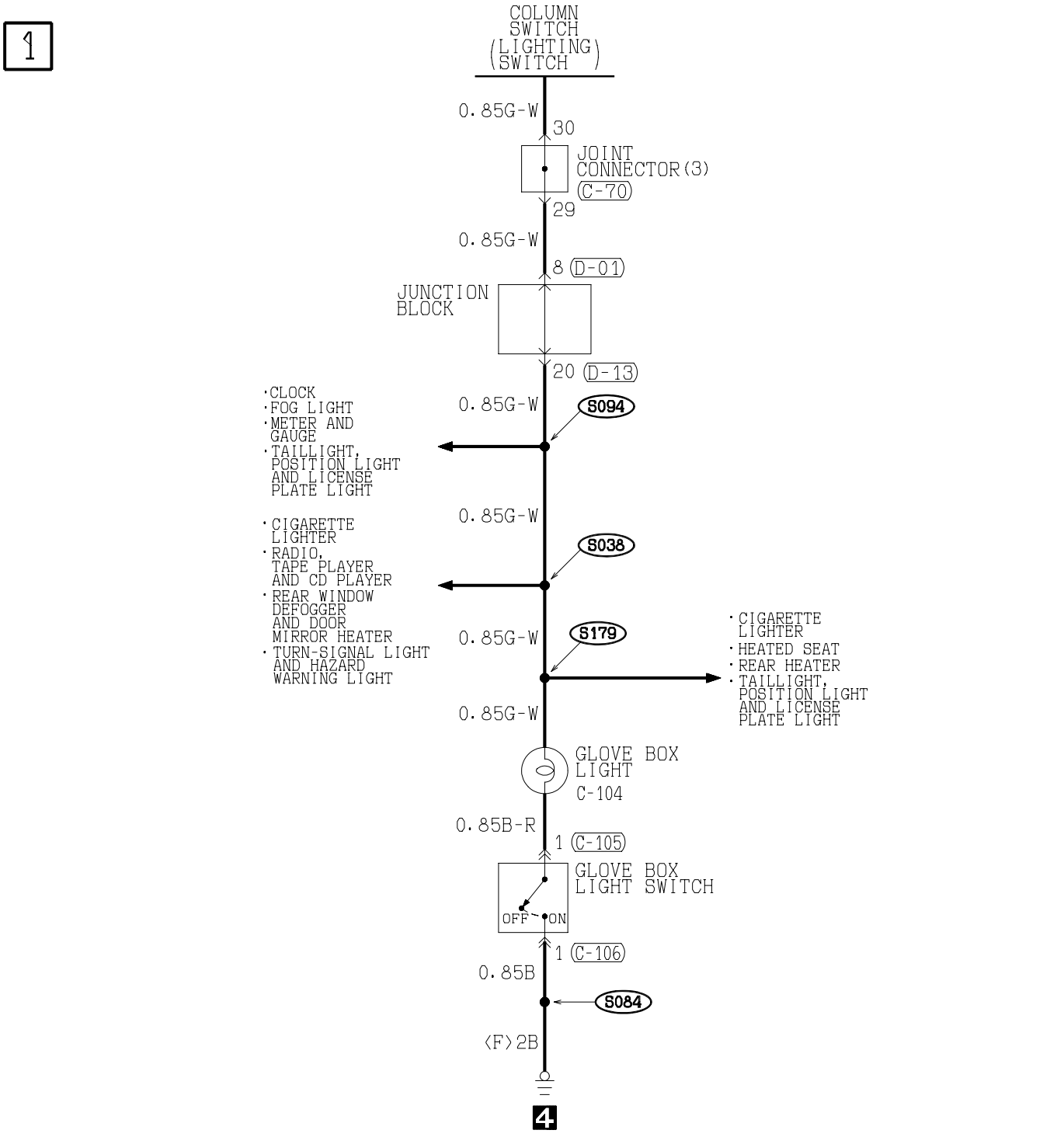

H3P08M08AA

TSB Revision

NOTES

TURN-SIGNAL LIGHT AND HAZARD WARNING LIGHT <VEHICLES WITHOUT KEYLESS ENTRY SYSTEM>

M1901002900557

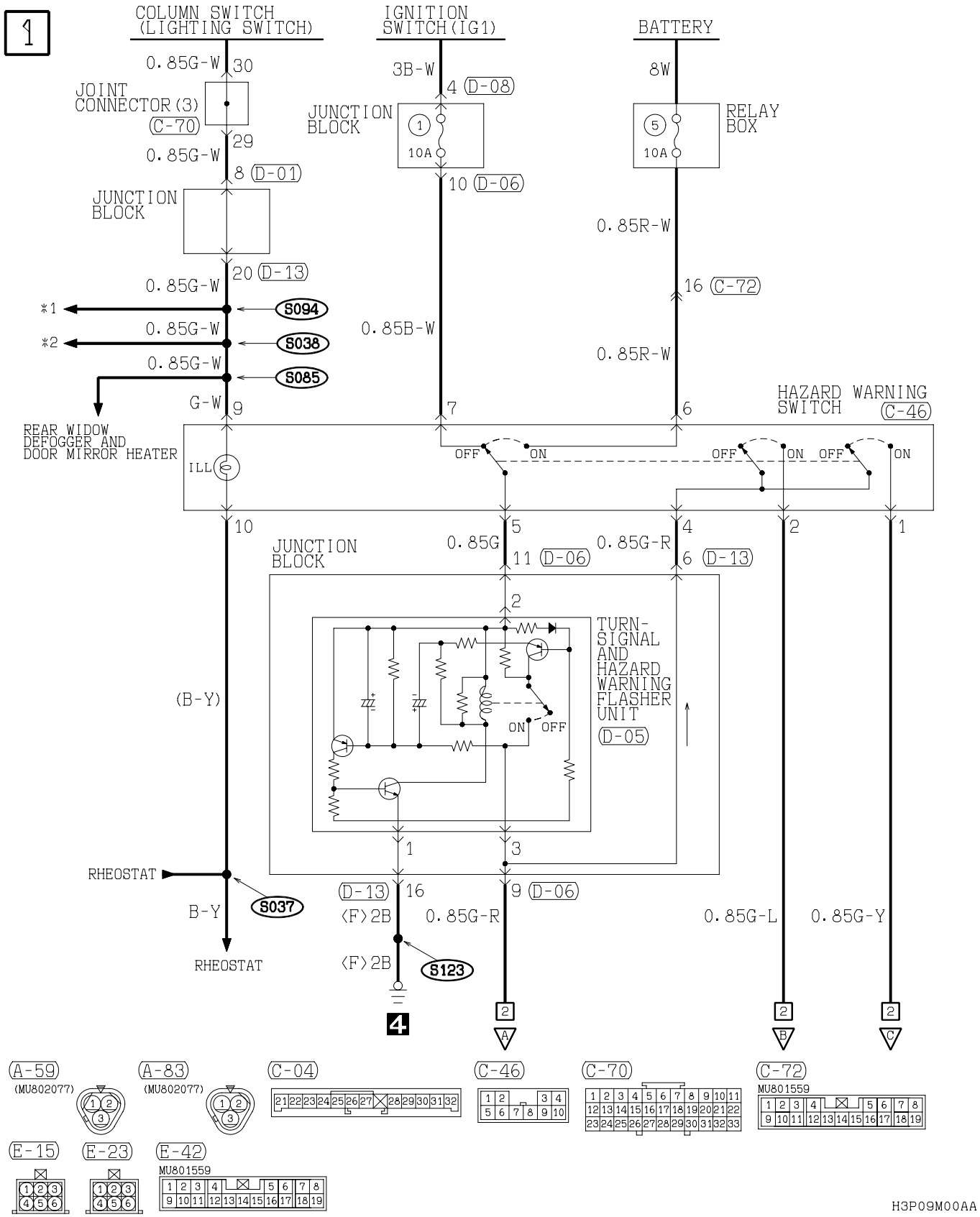

H3P09M00AA

TSB Revision

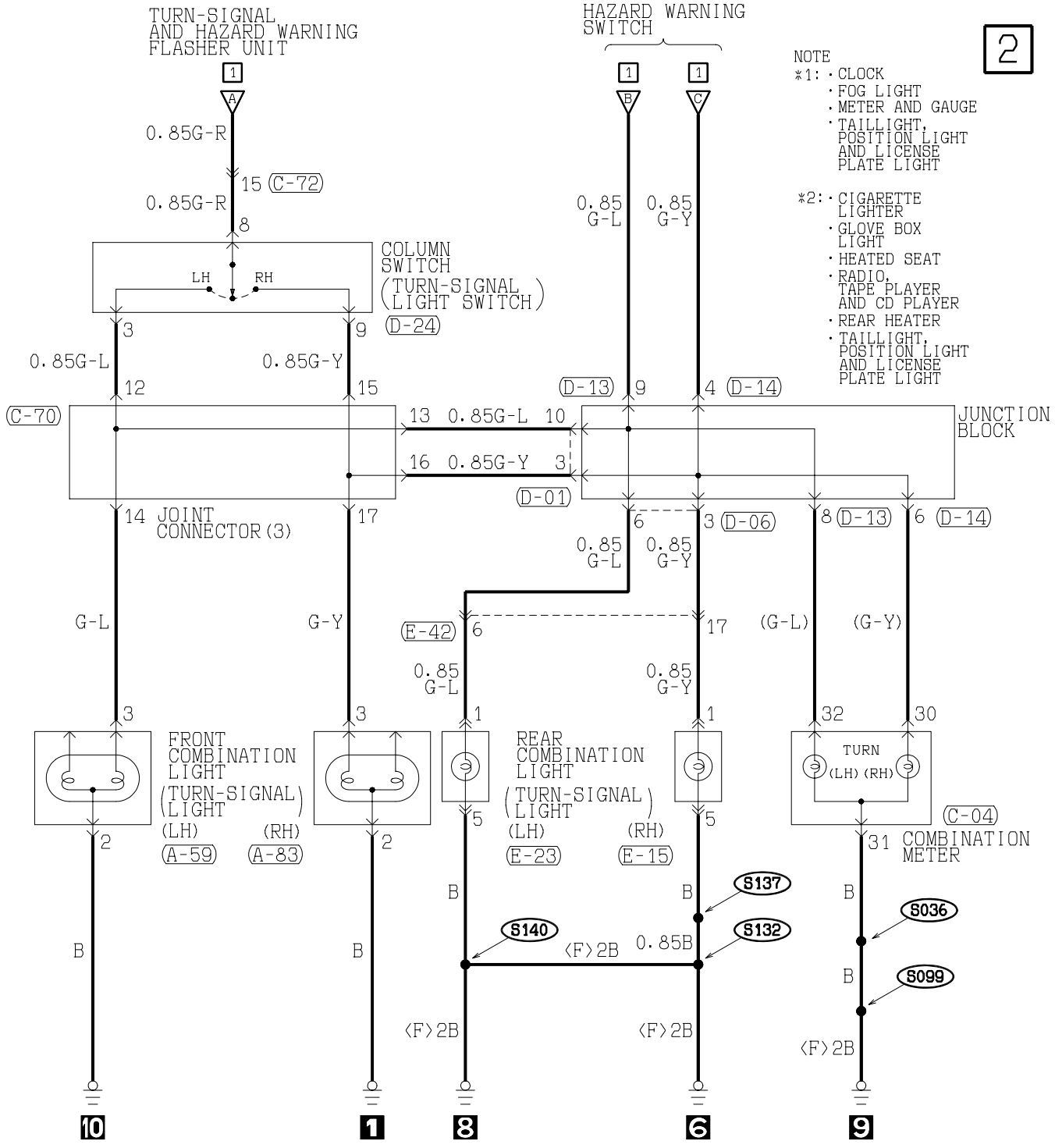

WIRE COLOR CODE

B :BLACK	BR:BROWN	G :GREEN	GR:GRAY	L :BLUE	LG:LIGHT GREEN	O :ORANGE	
P :PINK	R :RED	SB:SKY BLUE	V :VIOLET	W :WHITE	Y :YELLOW		

H3P09M00AB

TSB Revision

TURN-SIGNAL LIGHT AND HAZARD WARNING LIGHT <VEHICLES WITH KEYLESS ENTRY SYSTEM>

M1901002900568

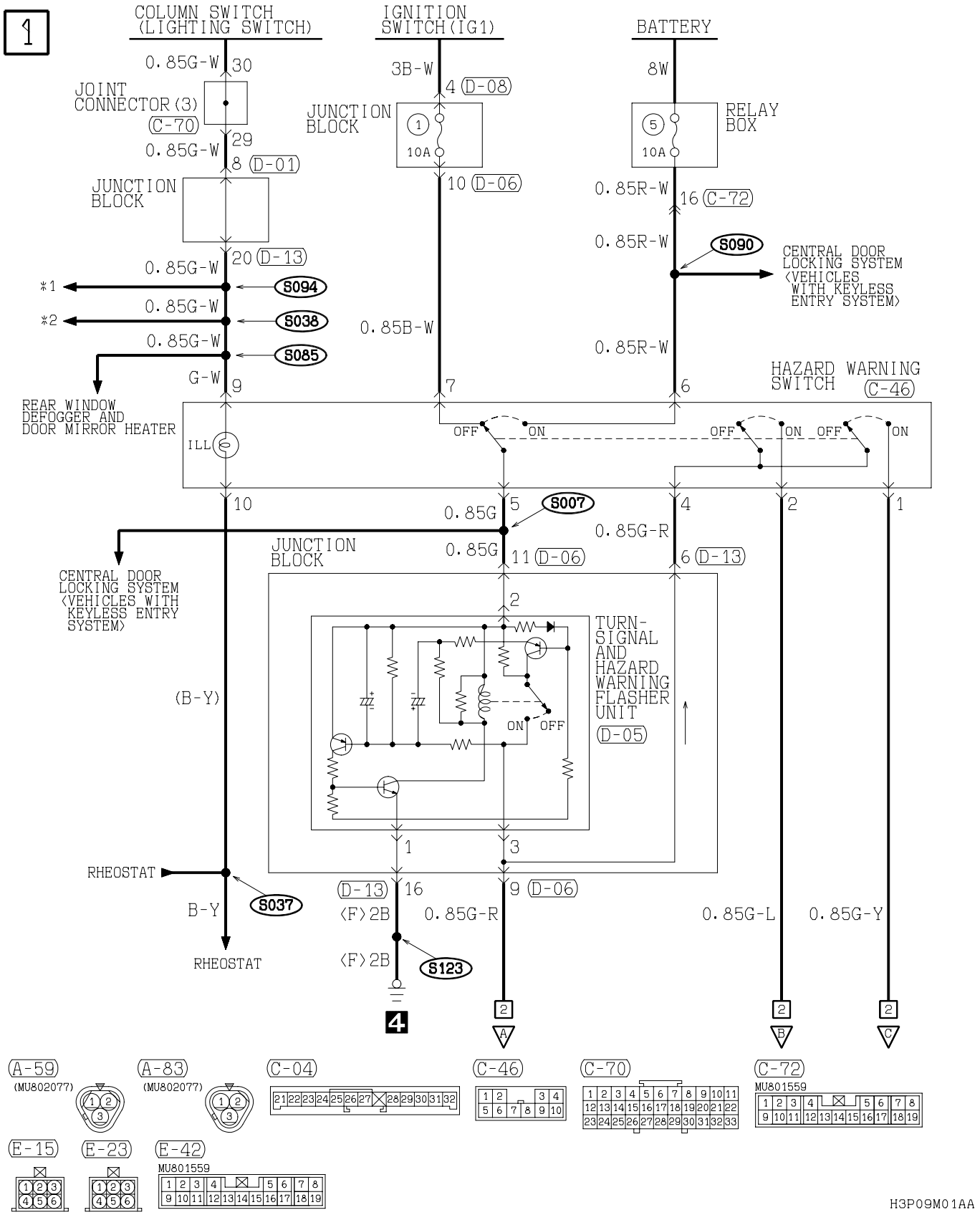

TSB Revision

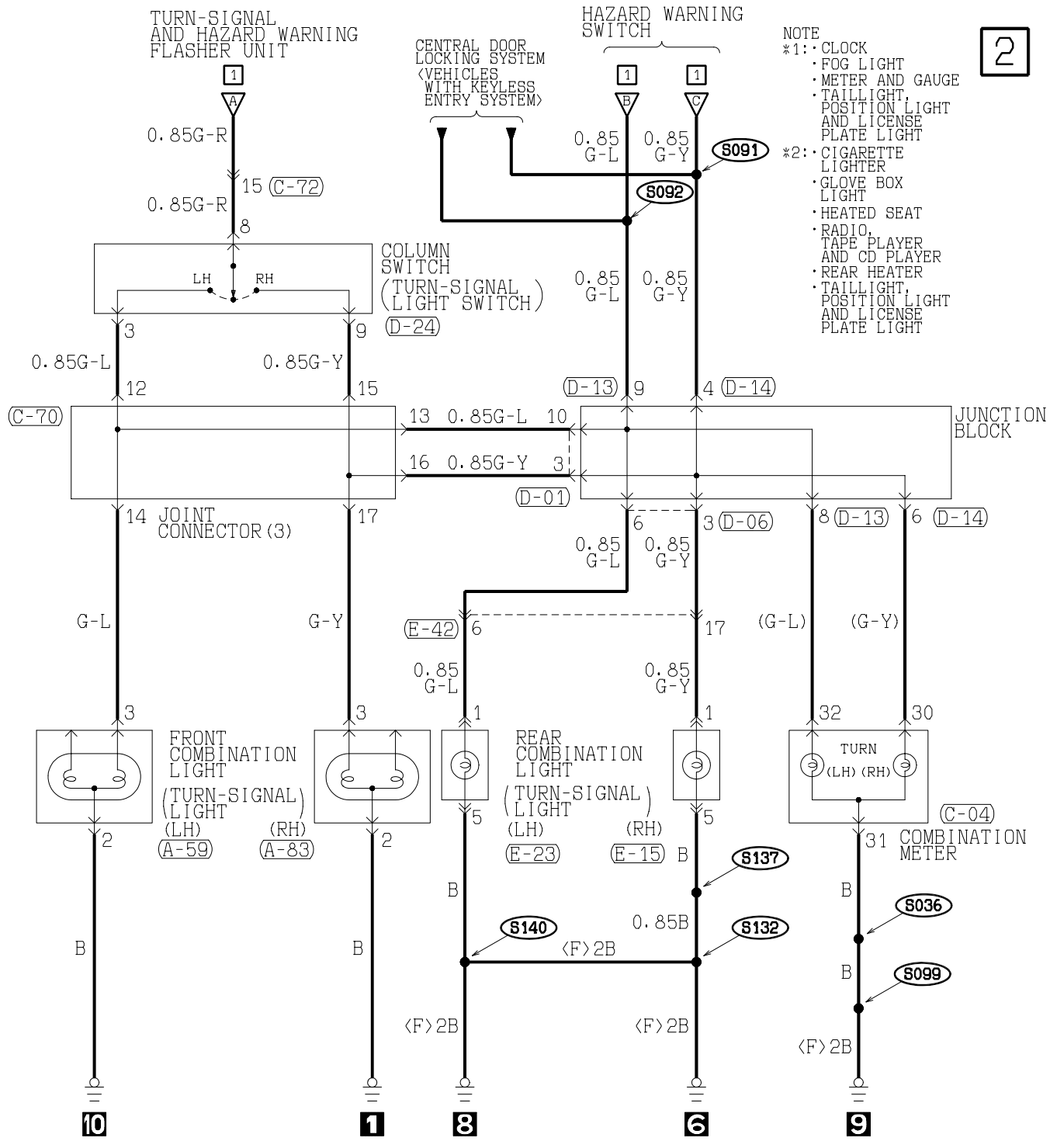

TSB Revision

STOPLIGHT

M1901003000513

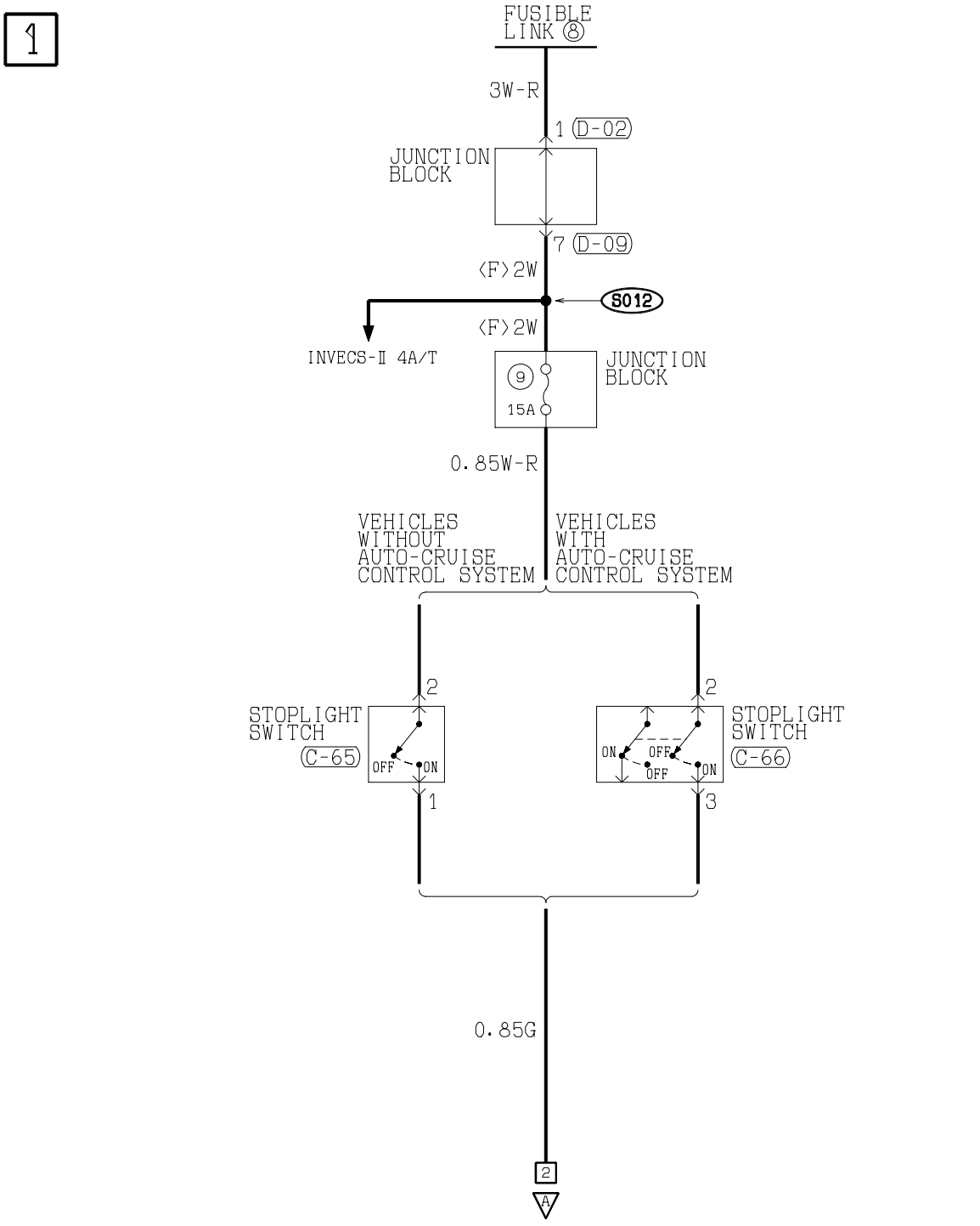

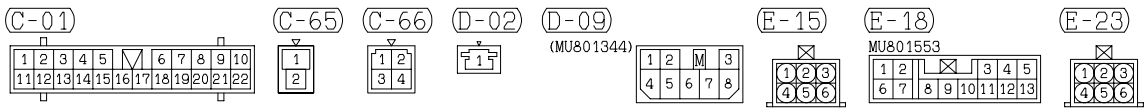

H3P09M02AA

TSB Revision

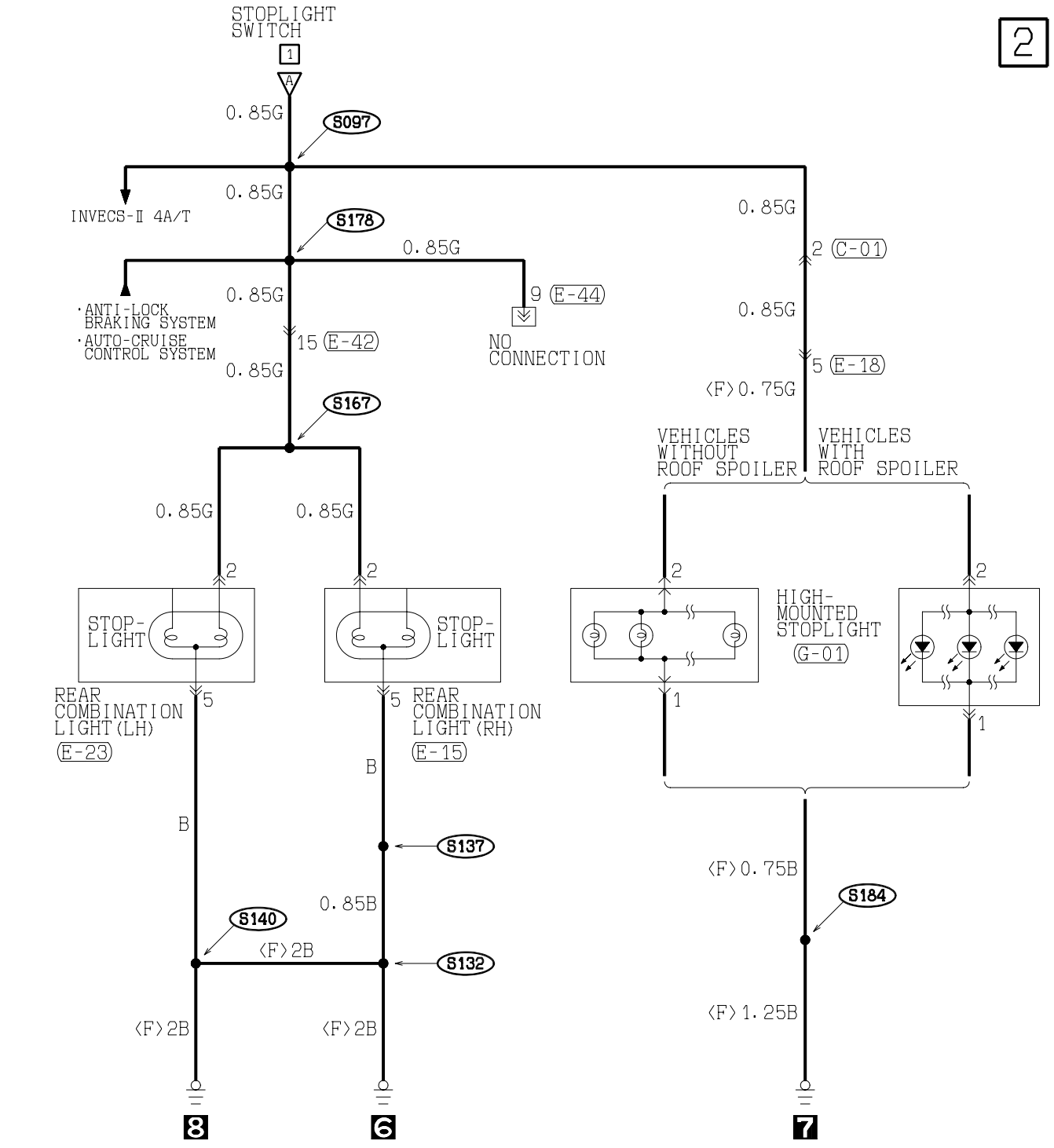

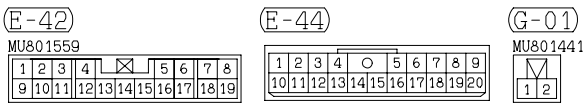

WIRE COLOR CODE

B :BLACK	BR:BROWN	G :GREEN	GR:GRAY	L :BLUE	LG:LIGHT GREEN	O :ORANGE	
P :PINK	R :RED	SB:SKY BLUE	V :VIOLET	W :WHITE	Y :YELLOW		

H3P09M02AB

TSB Revision

BACKUP LIGHT

M1901003100576

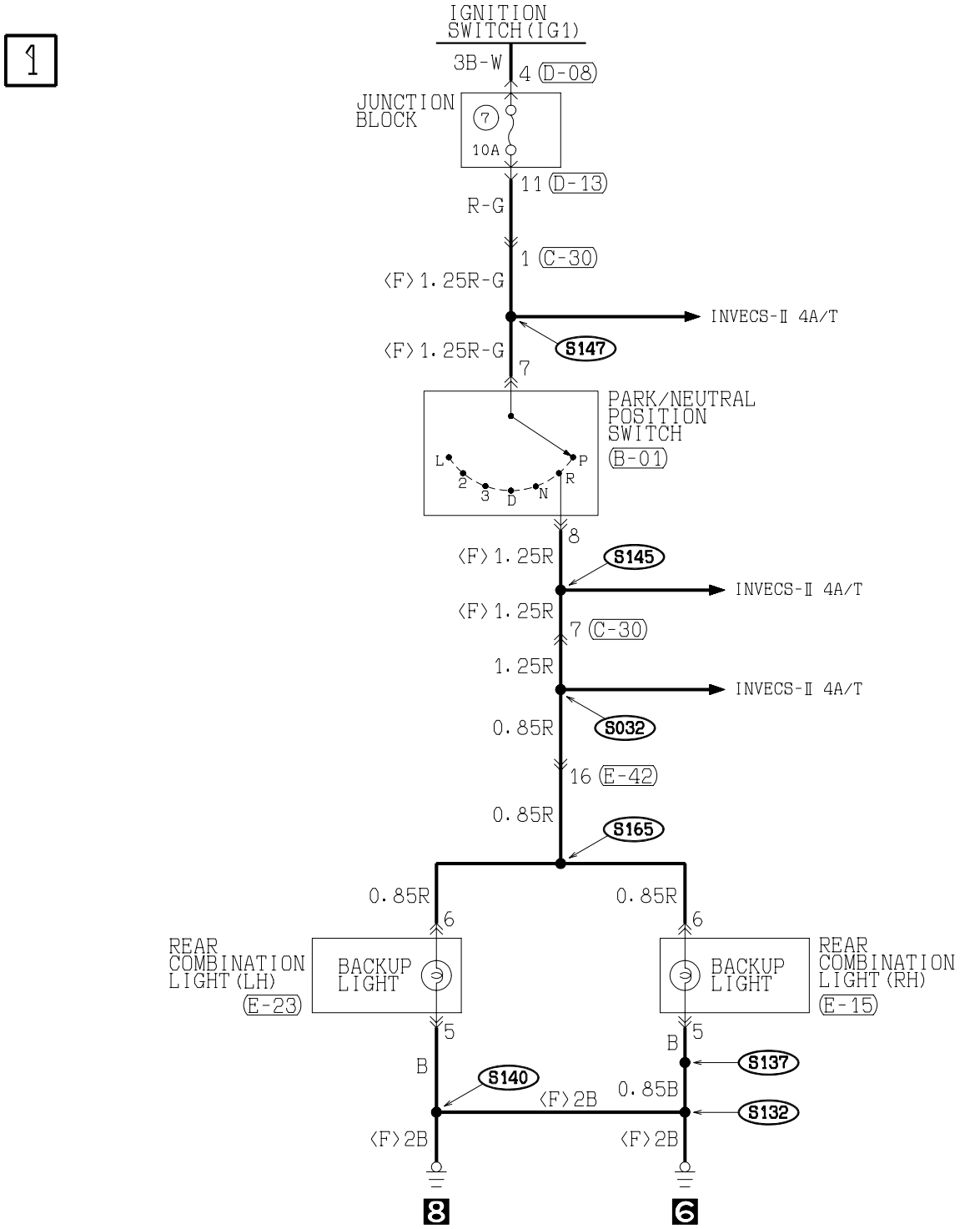

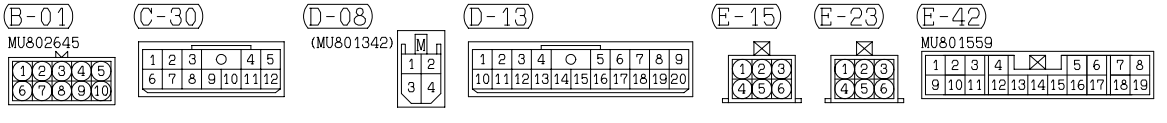

WIRE COLOR CODE

B :BLACK	BR:BROWN	G :GREEN	GR:GRAY	L :BLUE	LG:LIGHT GREEN	O :ORANGE	
P :PINK	R :RED	SB:SKY BLUE	V :VIOLET	W :WHITE	Y :YELLOW		

H3P09M03AA

TSB Revision

HORN

M1901003300440

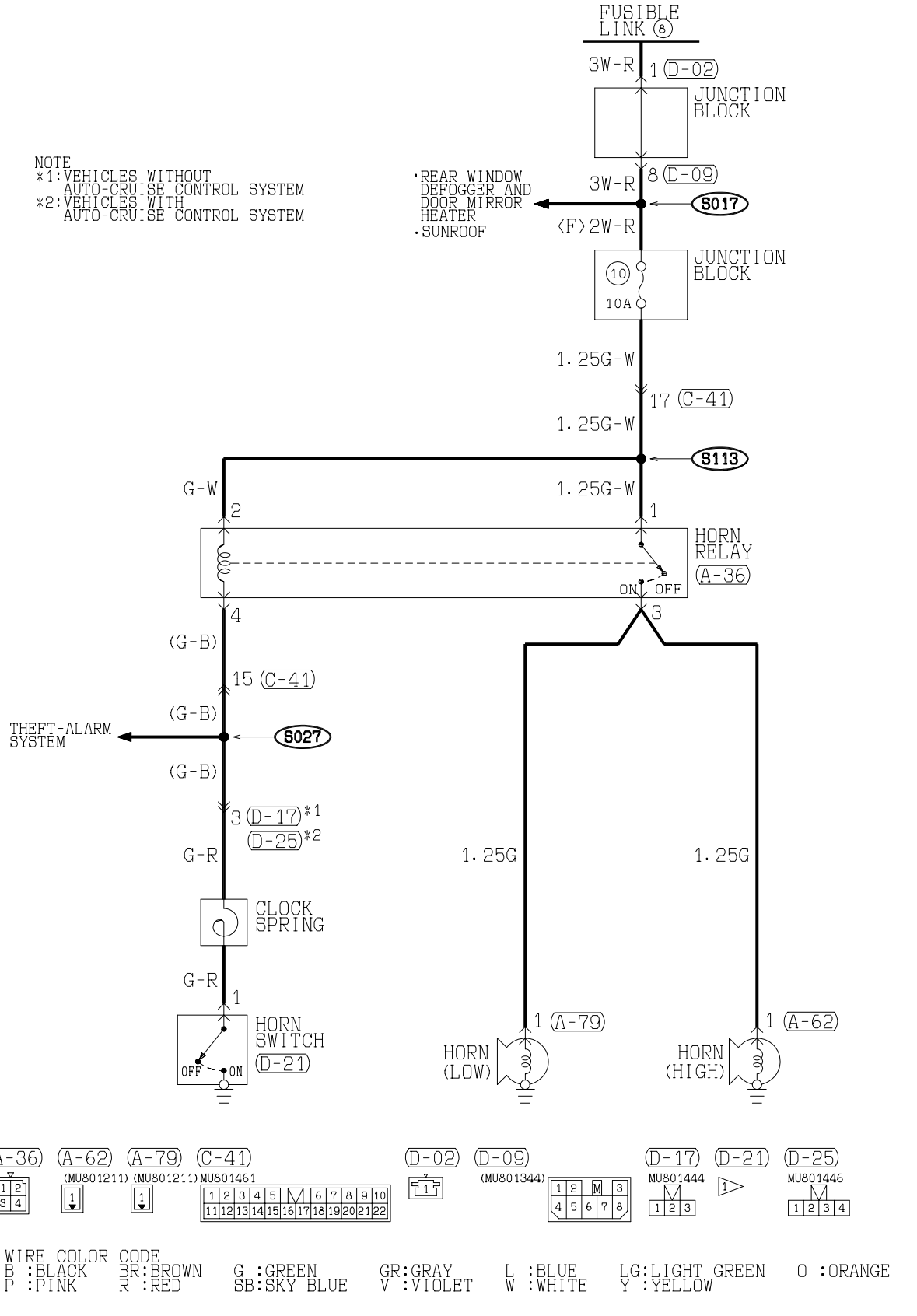

WIRE COLOR CODE

B :BLACK	BR:BROWN	G :GREEN	GR:GRAY	L :BLUE	LG:LIGHT GREEN	O :ORANGE	
P :PINK	R :RED	SB:SKY BLUE	V :VIOLET	W :WHITE	Y :YELLOW		

H3P09M04AA

TSB Revision

METER AND GAUGE

M1901003500455

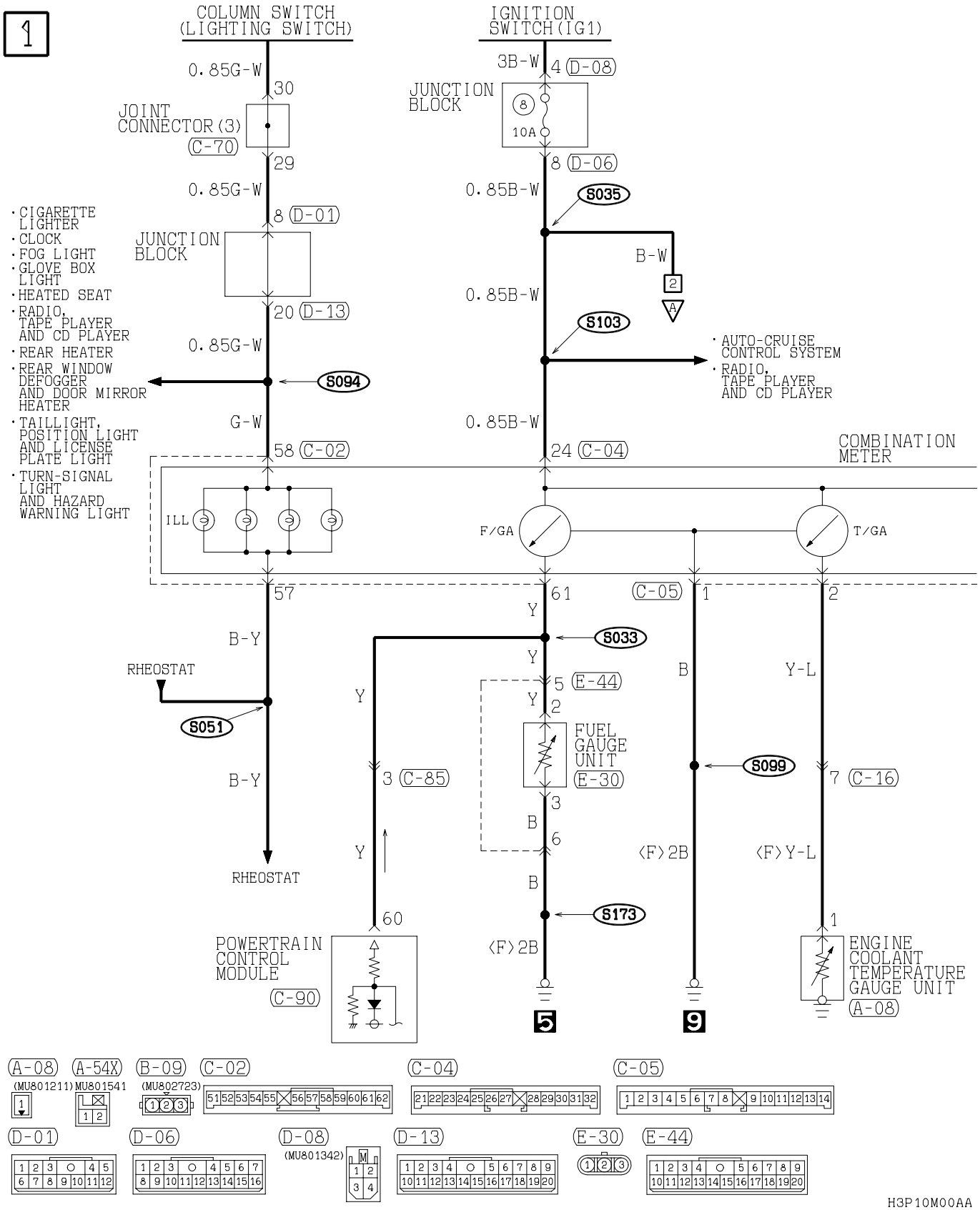

TSB Revision

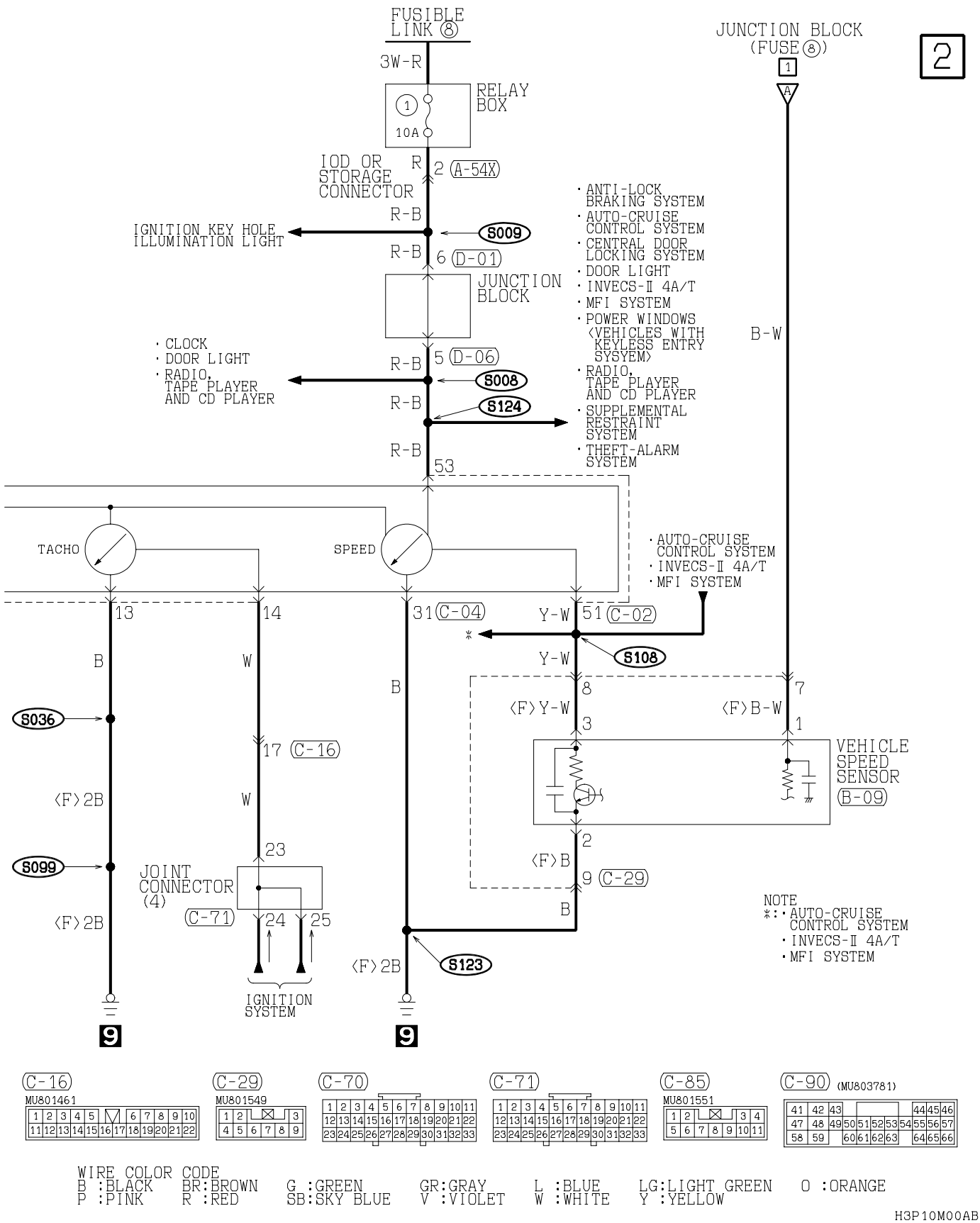
FUSIBLE LINK ⑧
3W-R
RELAY BOX
1
10A
IOD OR STORAGE CONNECTOR
R
2 (A-54X)
R-B
IGNITION KEY HOLE ILLUMINATION LIGHT
S009
R-B
6 (D-01)
JUNCTION BLOCK
· CLOCK
· DOOR LIGHT
· RADIO, TAPE PLAYER AND CD PLAYER
R-B
5 (D-06)
S008
R-B
S124
R-B
53
· ANTI-LOCK BRAKING SYSTEM
· AUTO-CRUISE CONTROL SYSTEM
· CENTRAL DOOR LOCKING SYSTEM
· DOOR LIGHT
· INVECS-Ⅱ 4A/T
· MFI SYSTEM
· POWER WINDOWS (VEHICLES WITH KEYLESS ENTRY SYSYEM)
· RADIO, TAPE PLAYER AND CD PLAYER
· SUPPLEMENTAL RESTRAINT SYSTEM
· THEFT-ALARM SYSTEM
JUNCTION BLOCK (FUSE ⑧)
1
A
B-W
2
TACHO
SPEED
· AUTO-CRUISE CONTROL SYSTEM
· INVECS-Ⅱ 4A/T
· MFI SYSTEM
13
14
31 (C-04)
Y-W
51 (C-02)
*
Y-W
S108
B
W
B
8
7
⟨F⟩Y-W
⟨F⟩B-W
3
1
S036
17 (C-16)
VEHICLE SPEED SENSOR
(B-09)
⟨F⟩2B
W
2
23
⟨F⟩B
S099
JOINT CONNECTOR (4)
9 (C-29)
(C-71)
24
25
B
⟨F⟩2B
⟨F⟩2B
S123
IGNITION SYSTEM
9
9
NOTE
*: · AUTO-CRUISE CONTROL SYSTEM
· INVECS-Ⅱ 4A/T
· MFI SYSTEM
(C-16)
MU801461
(C-29)
MU801549
(C-70)
(C-71)
(C-85)
MU801551
(C-90) (MU803781)
WIRE COLOR CODE
B :BLACK BR:BROWN G :GREEN GR:GRAY L :BLUE LG:LIGHT GREEN O :ORANGE
P :PINK R :RED SB:SKY BLUE V :VIOLET W :WHITE Y :YELLOW
H3P10M00AB

COMPASS AND TEMPERATURE DISPLAY

M1901016900118

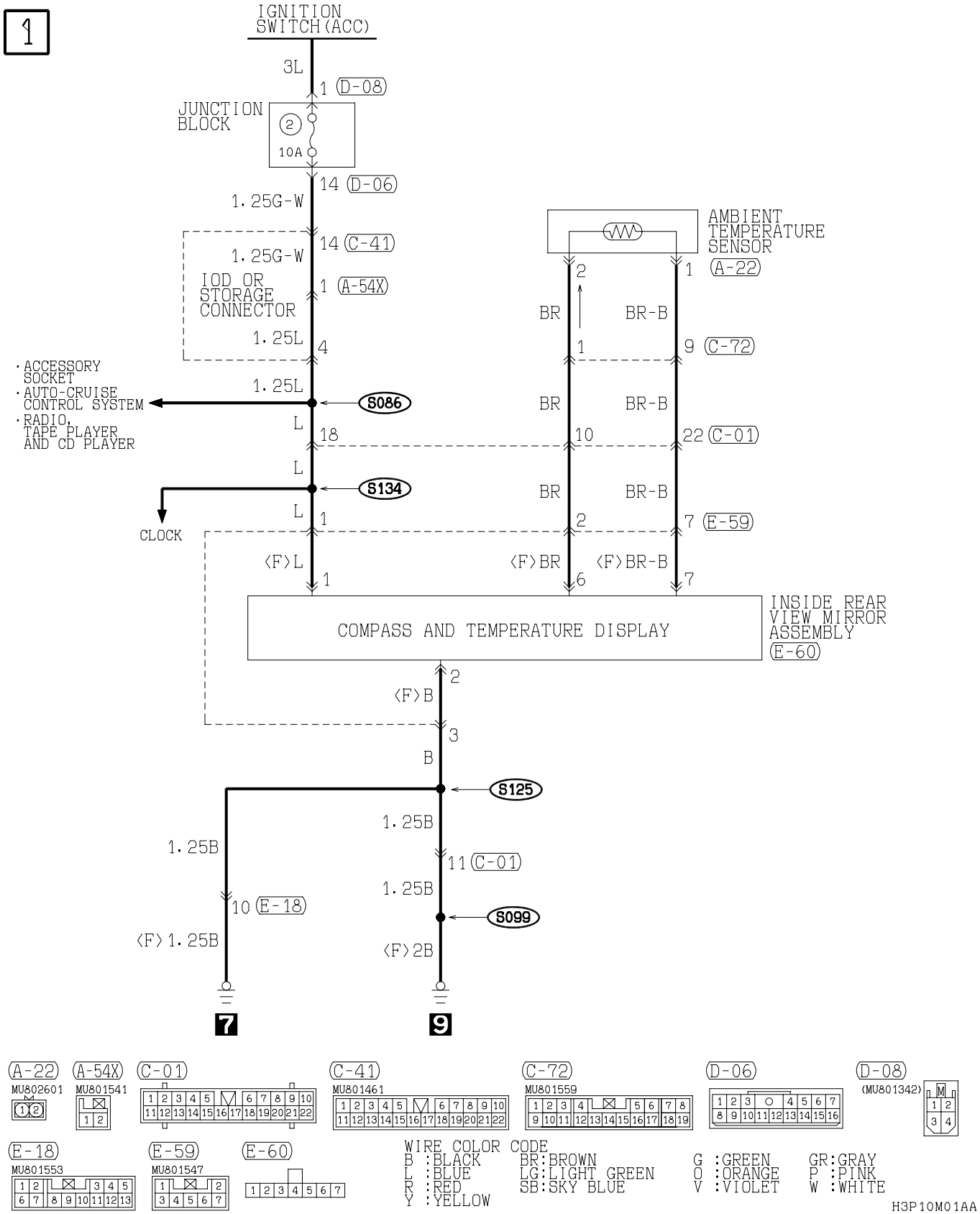

TSB Revision

NOTES

FUEL WARNING LIGHT, OIL PRESSURE WARNING LIGHT, BRAKE WARNING LIGHT, SEAT BELT WARNING LIGHT

M1901011800417

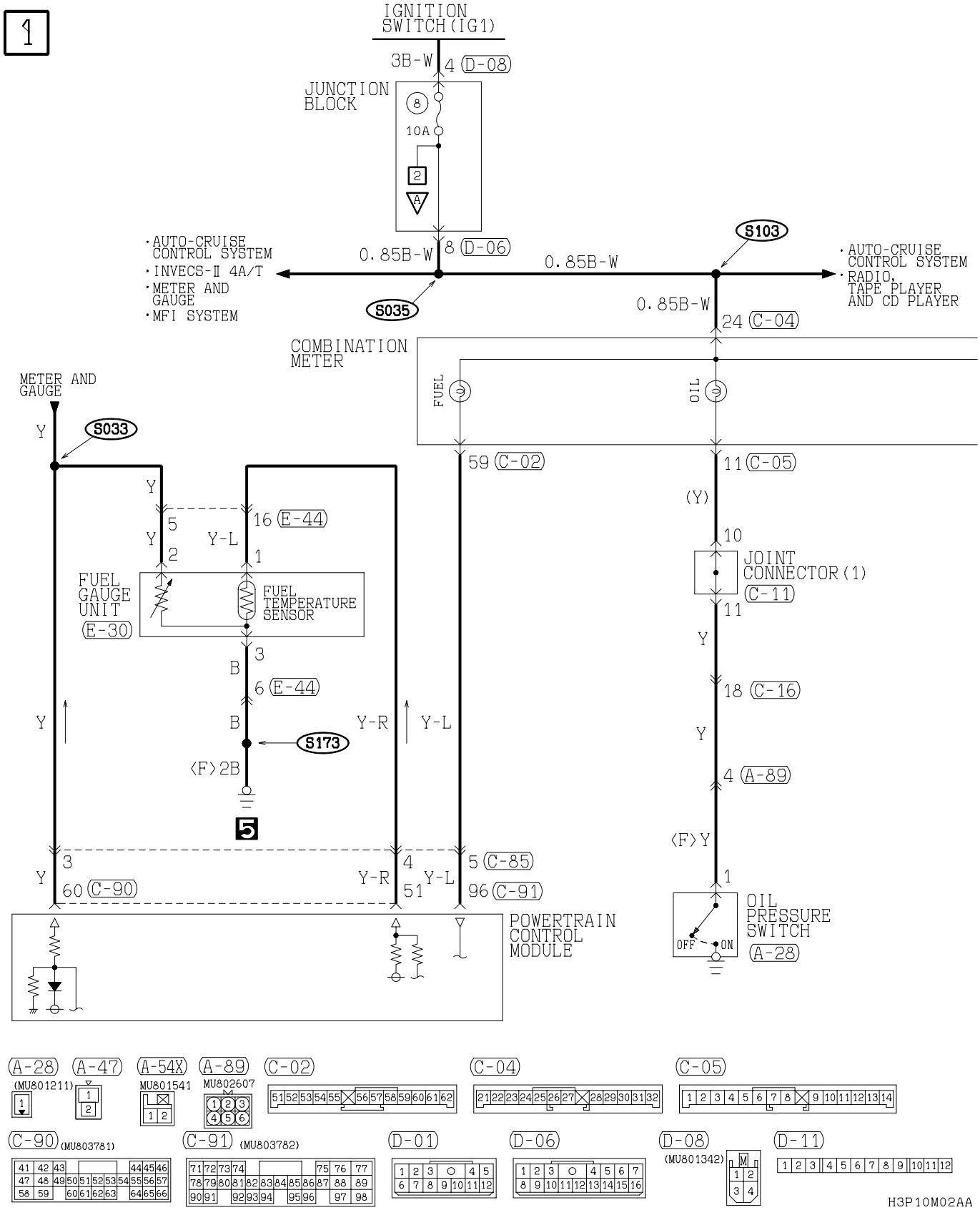

TSB Revision

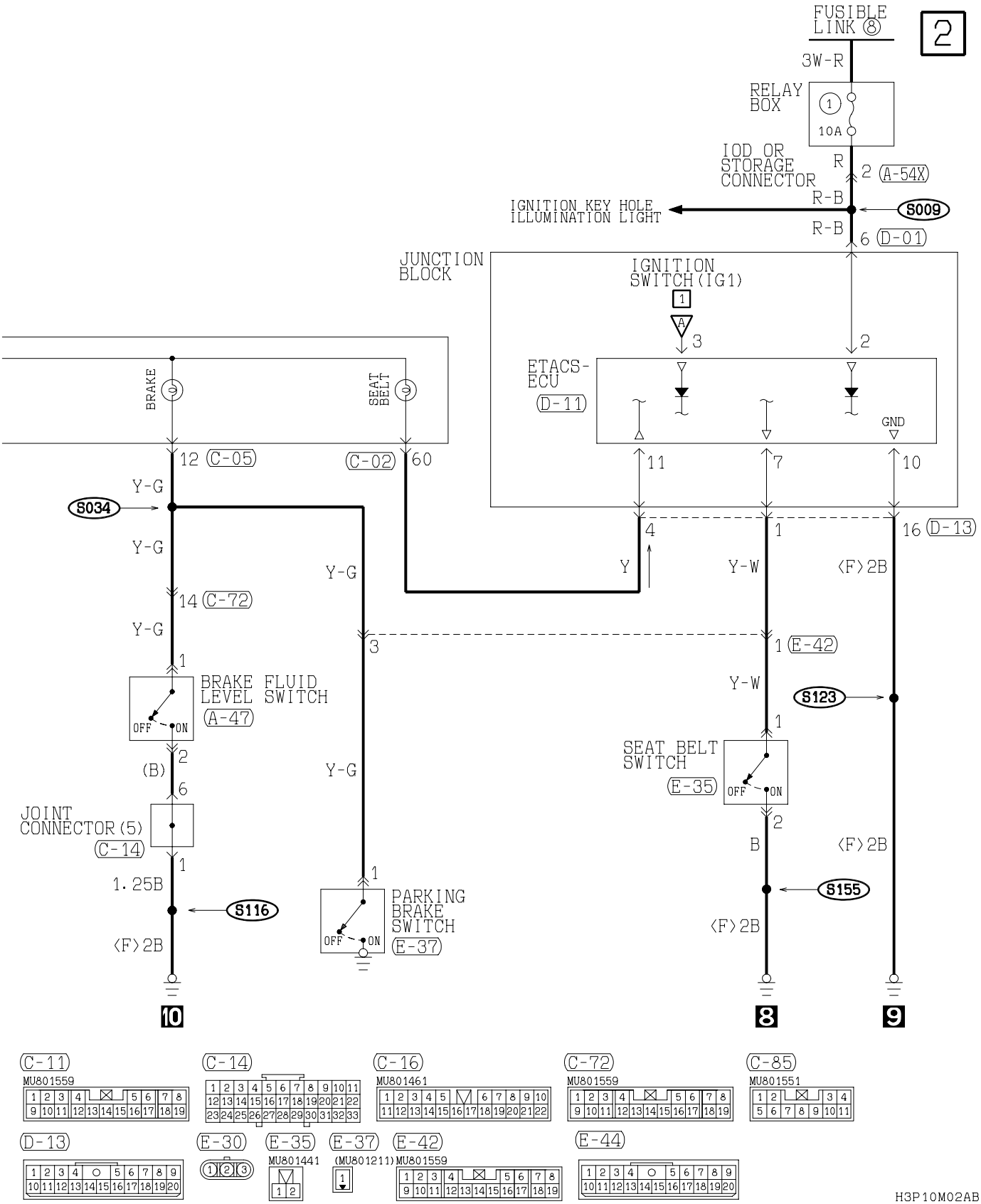

H3P10M02AB

TSB Revision

POWER WINDOWS <VEHICLES WITHOUT KEYLESS ENTRY SYSTEM>

M1901004600563

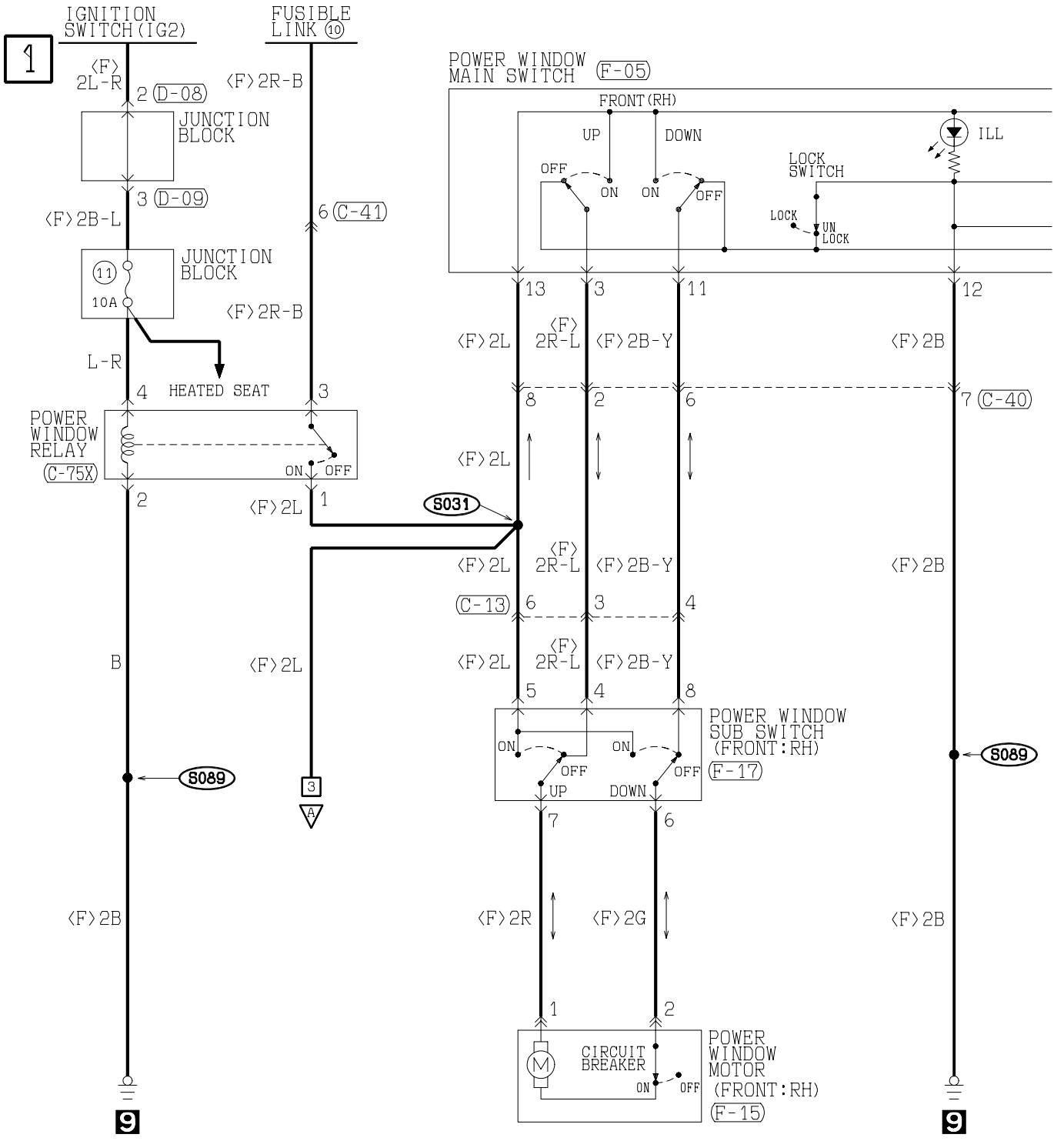

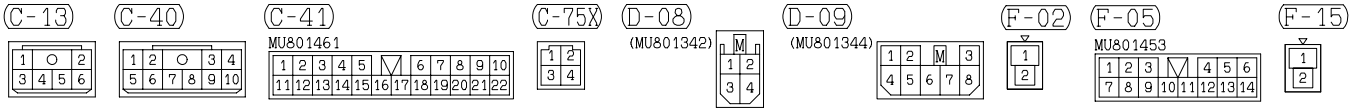

H3P11M00AA

TSB Revision

2

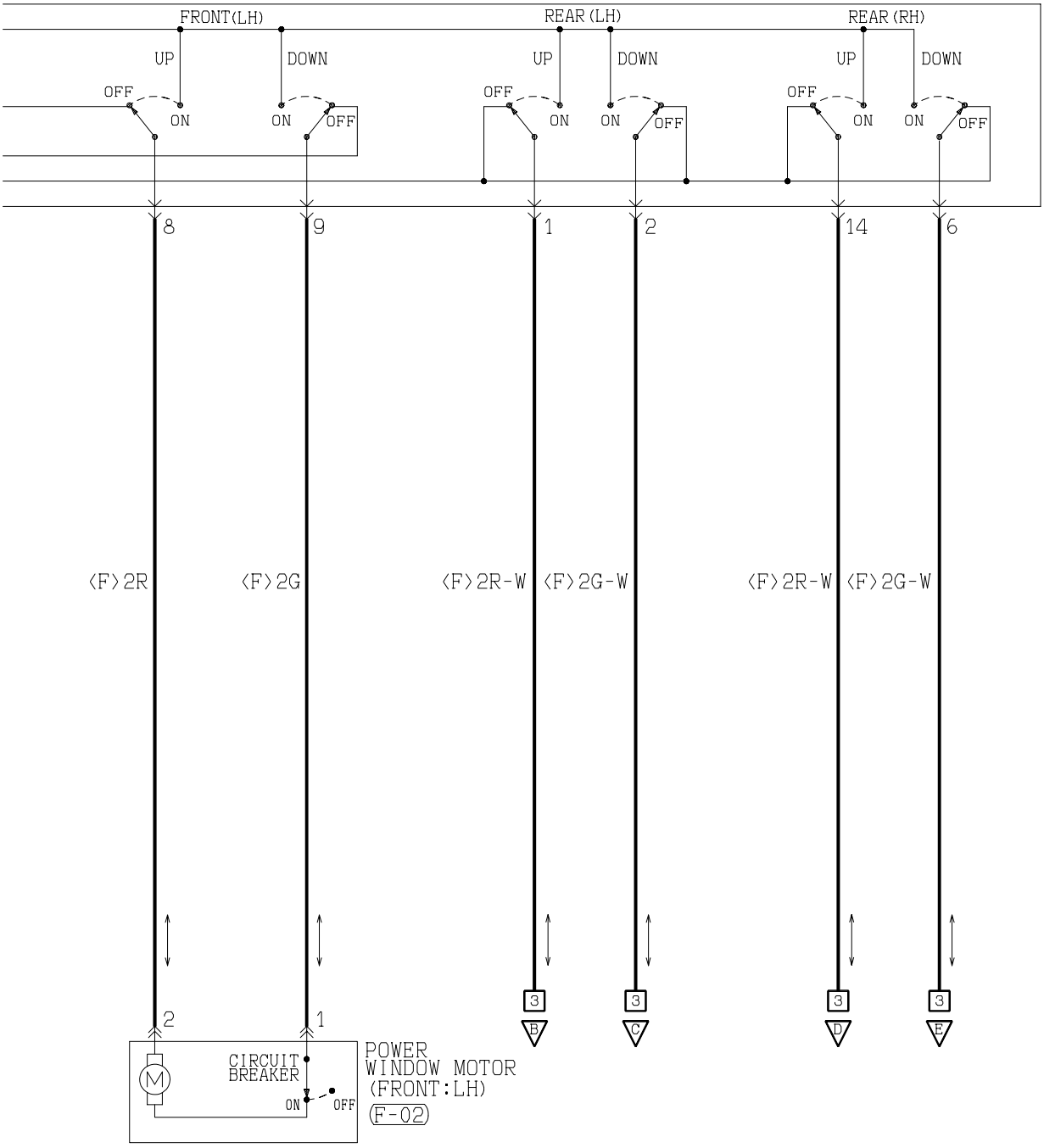

F-17

MU801449

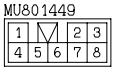

WIRE COLOR CODE

B :BLACK	BR:BROWN	G :GREEN	GR:GRAY	L :BLUE	LG:LIGHT GREEN	O :ORANGE	
P :PINK	R :RED	SB:SKY BLUE	V :VIOLET	W :WHITE	Y :YELLOW		

H3P11M00AB

TSB Revision

POWER WINDOWS <VEHICLES WITHOUT KEYLESS ENTRY SYSTEM> (CONTINUED)

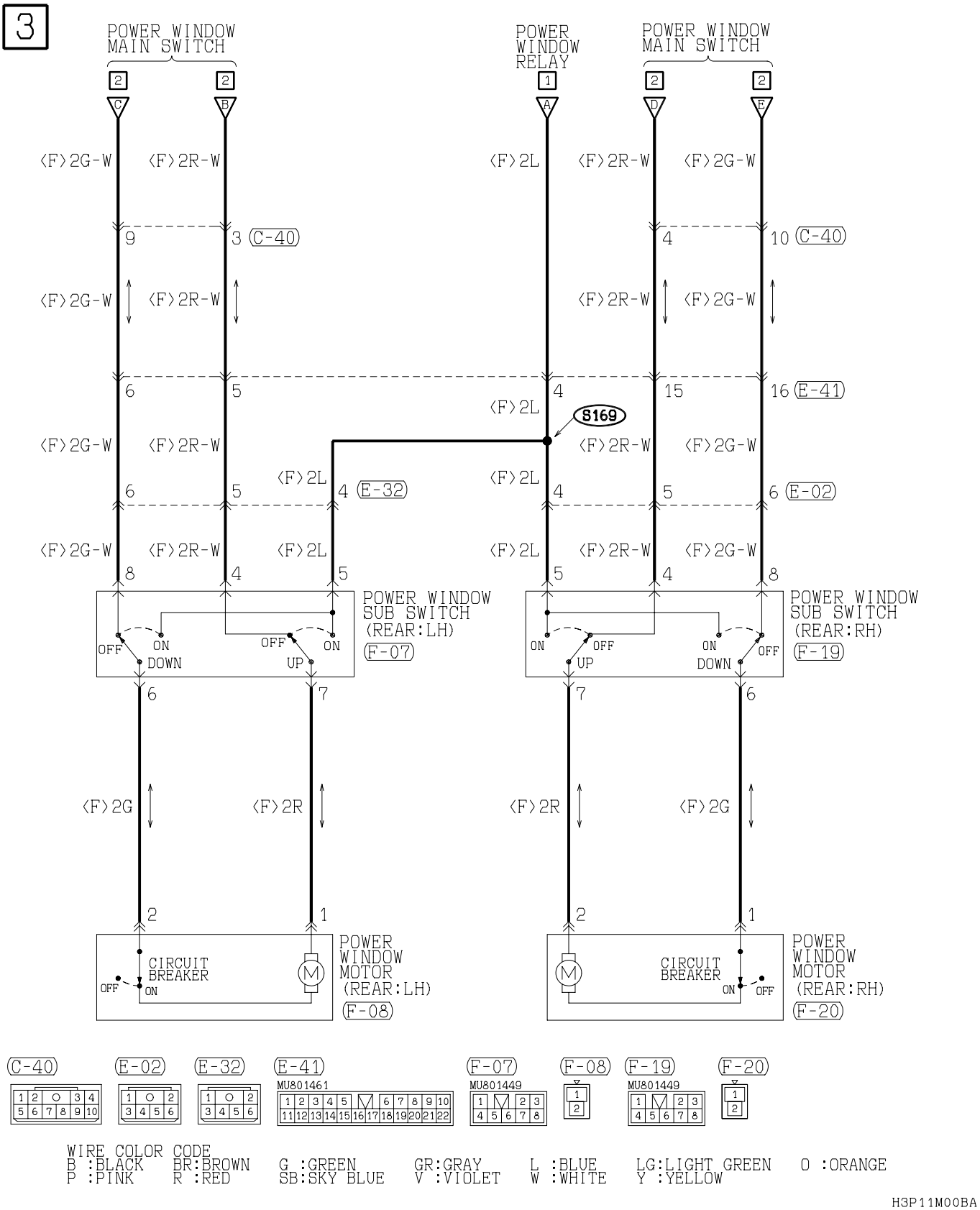

TSB Revision

NOTES

POWER WINDOWS <VEHICLES WITH KEYLESS ENTRY SYSTEM>

M1901004600574

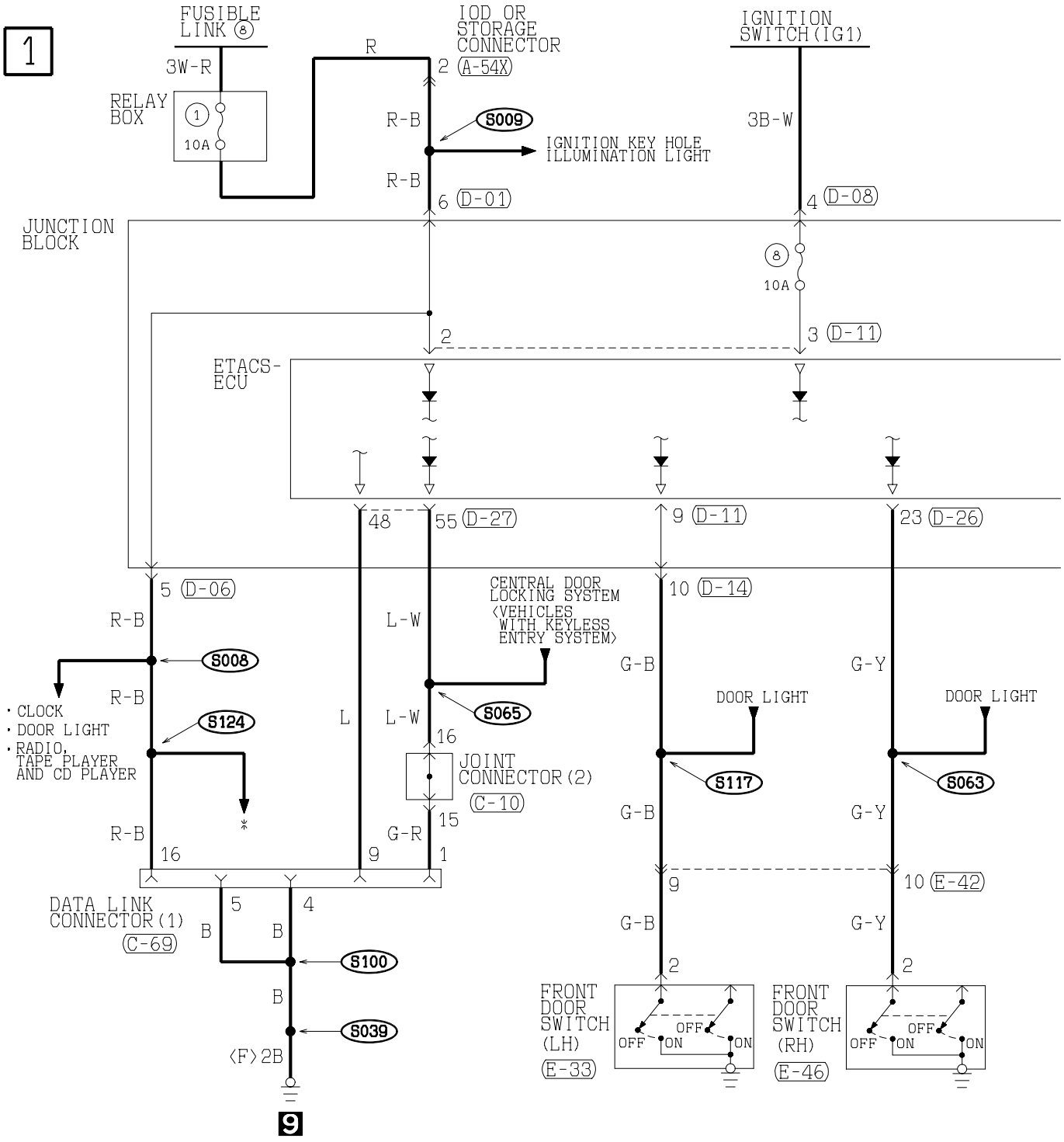

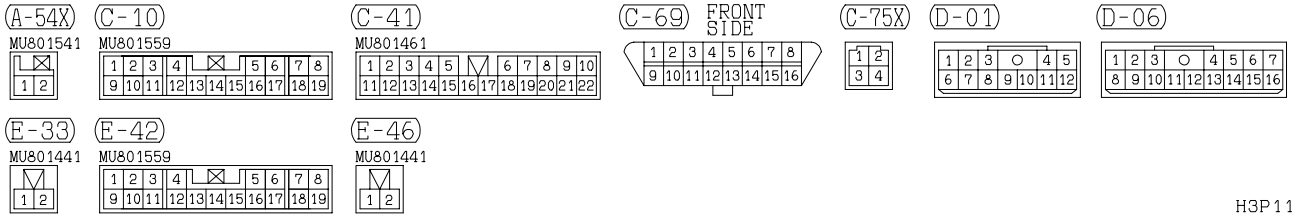

H3P11M01AA

TSB Revision

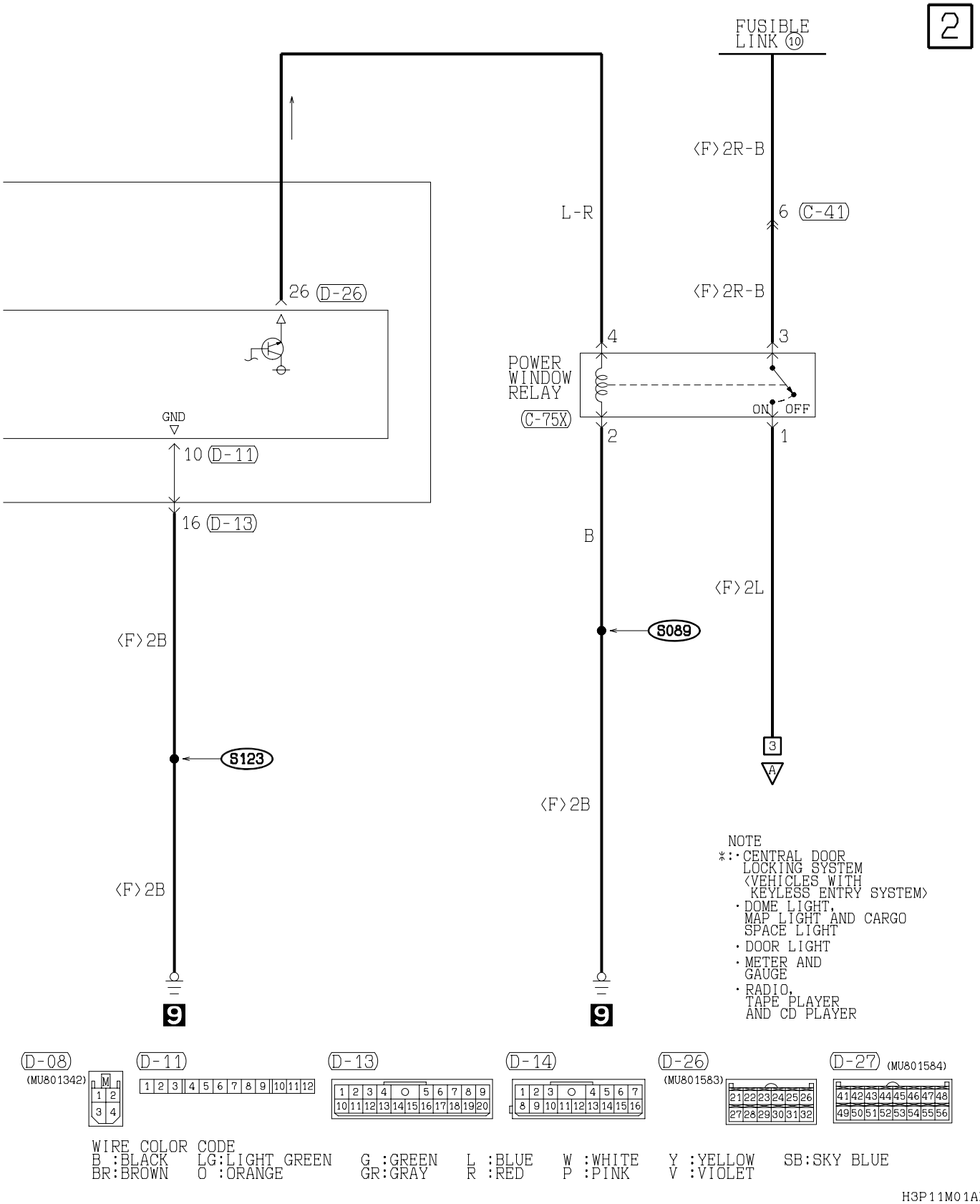

TSB Revision

POWER WINDOWS <VEHICLES WITH KEYLESS ENTRY SYSTEM> (CONTINUED)

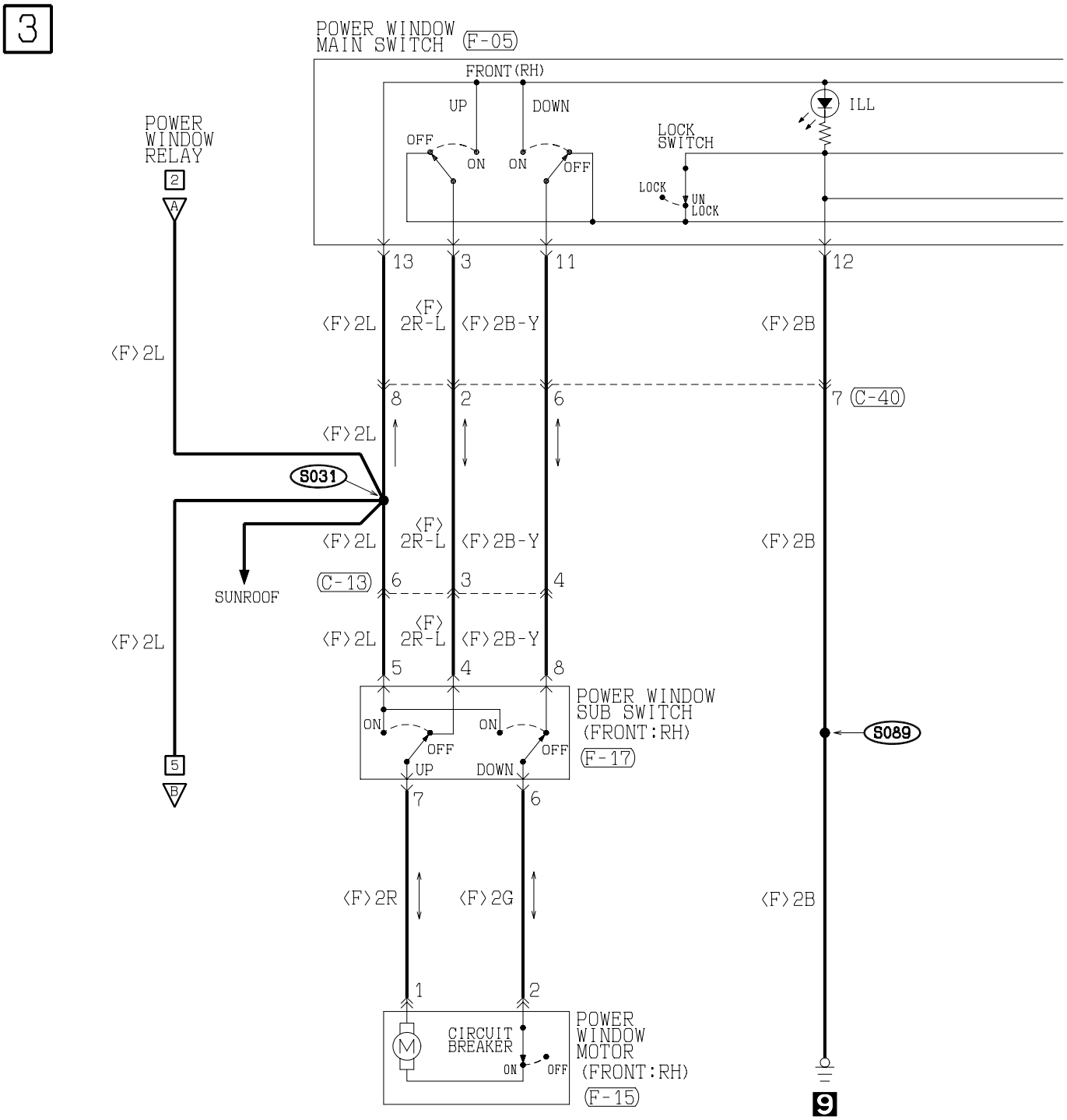

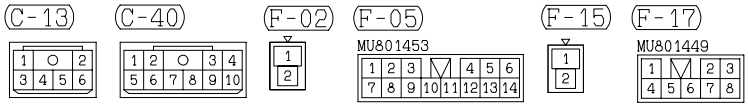

H3P11M01BA

TSB Revision

4

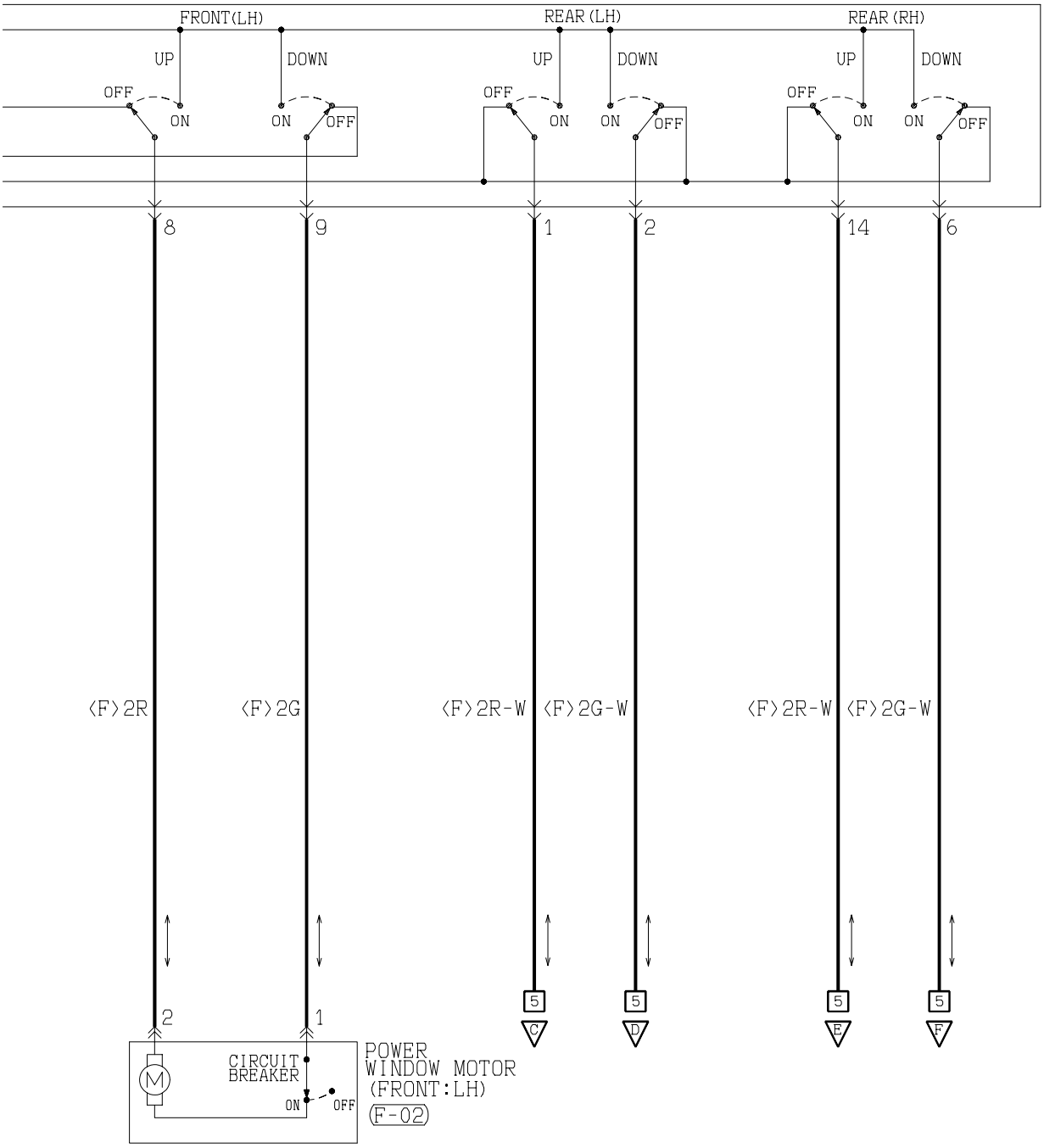

WIRE COLOR CODE

B :BLACK	BR:BROWN	G :GREEN	GR:GRAY	L :BLUE	LG:LIGHT GREEN	O :ORANGE	
P :PINK	R :RED	SB:SKY BLUE	V :VIOLET	W :WHITE	Y :YELLOW		

H3P11M01BB

TSB Revision

POWER WINDOWS <VEHICLES WITH KEYLESS ENTRY SYSTEM> (CONTINUED)

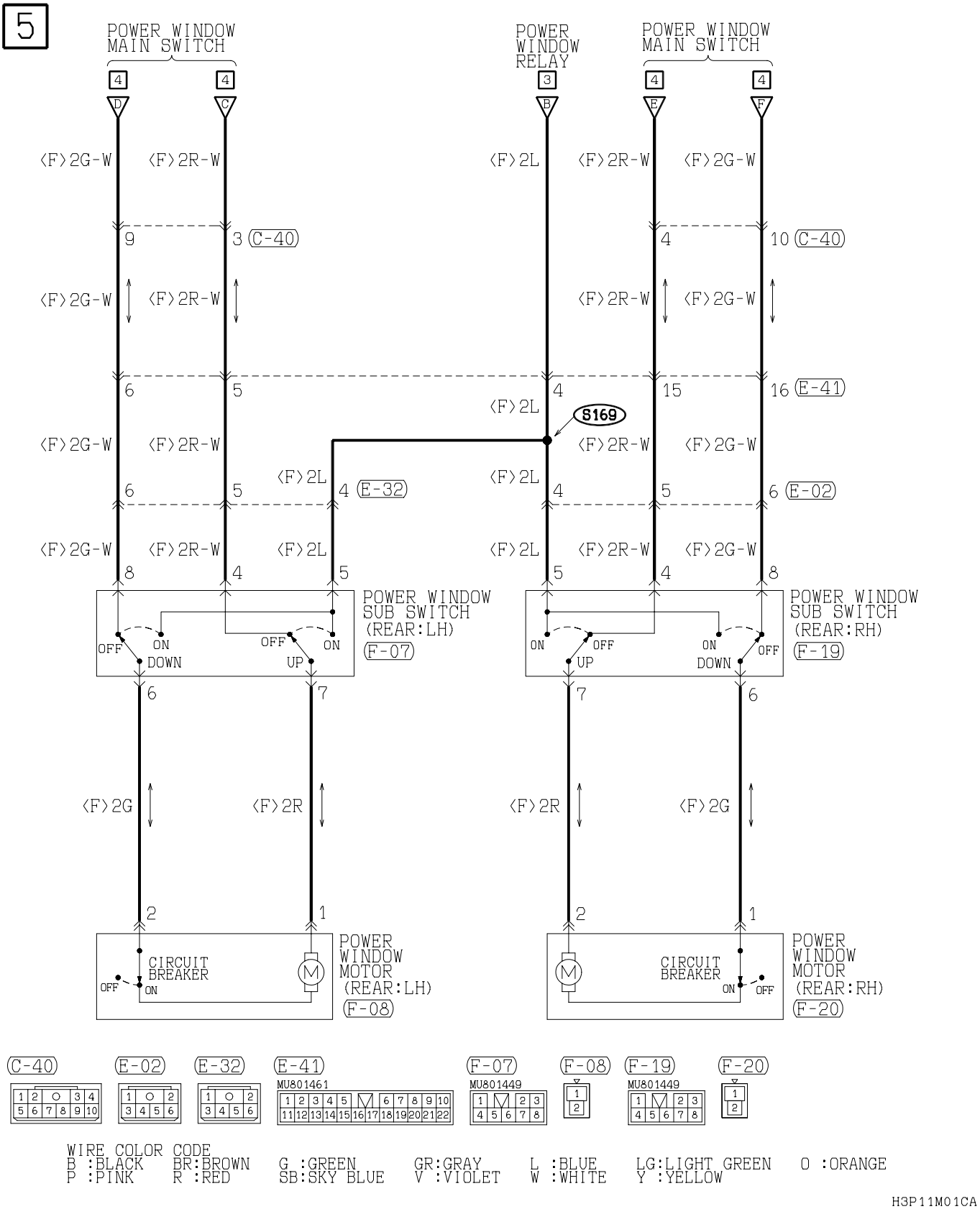

TSB Revision

NOTES

CENTRAL DOOR LOCKING SYSTEM <VEHICLES WITHOUT KEYLESS ENTRY SYSTEM>

M1901004700838

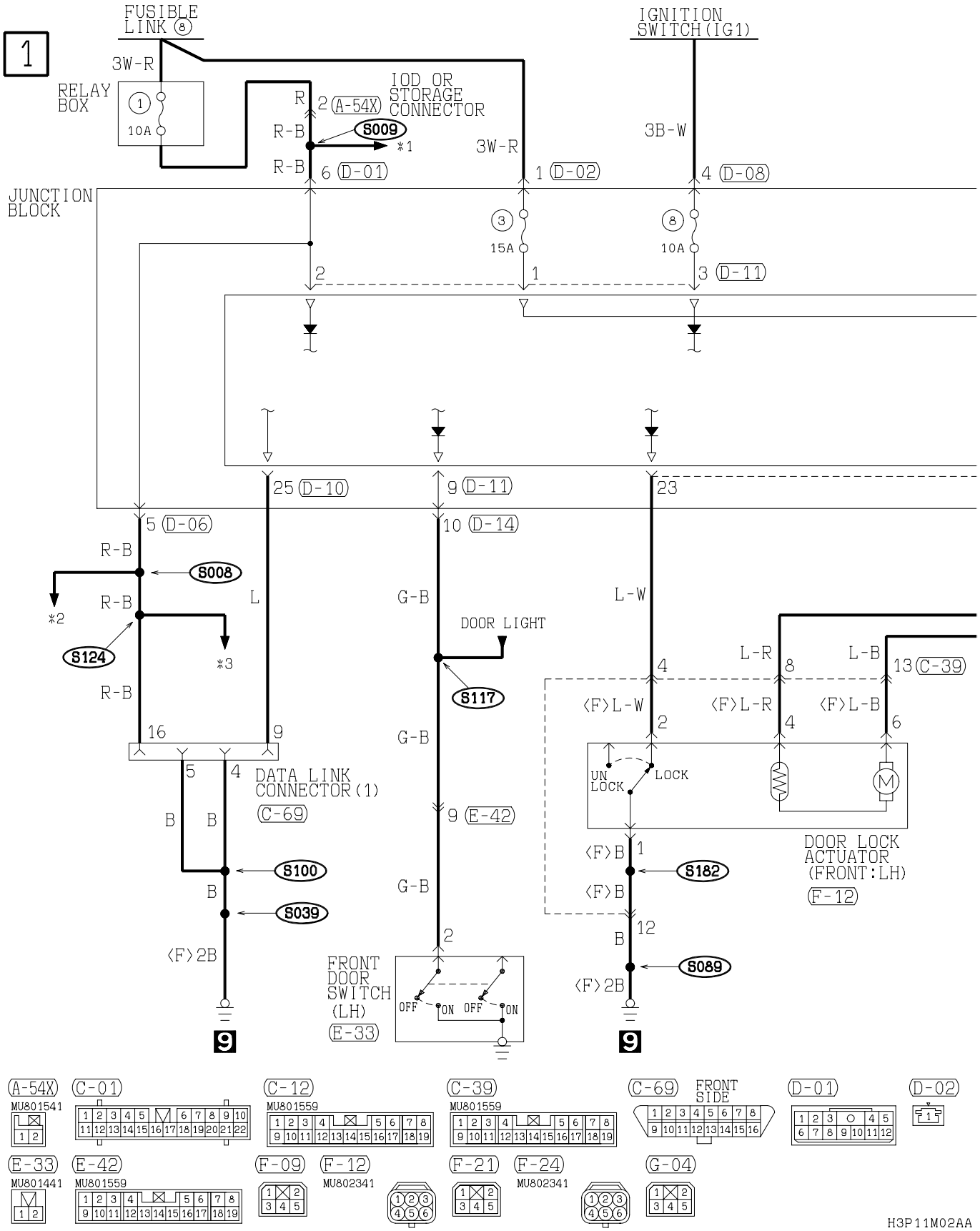

TSB Revision

2

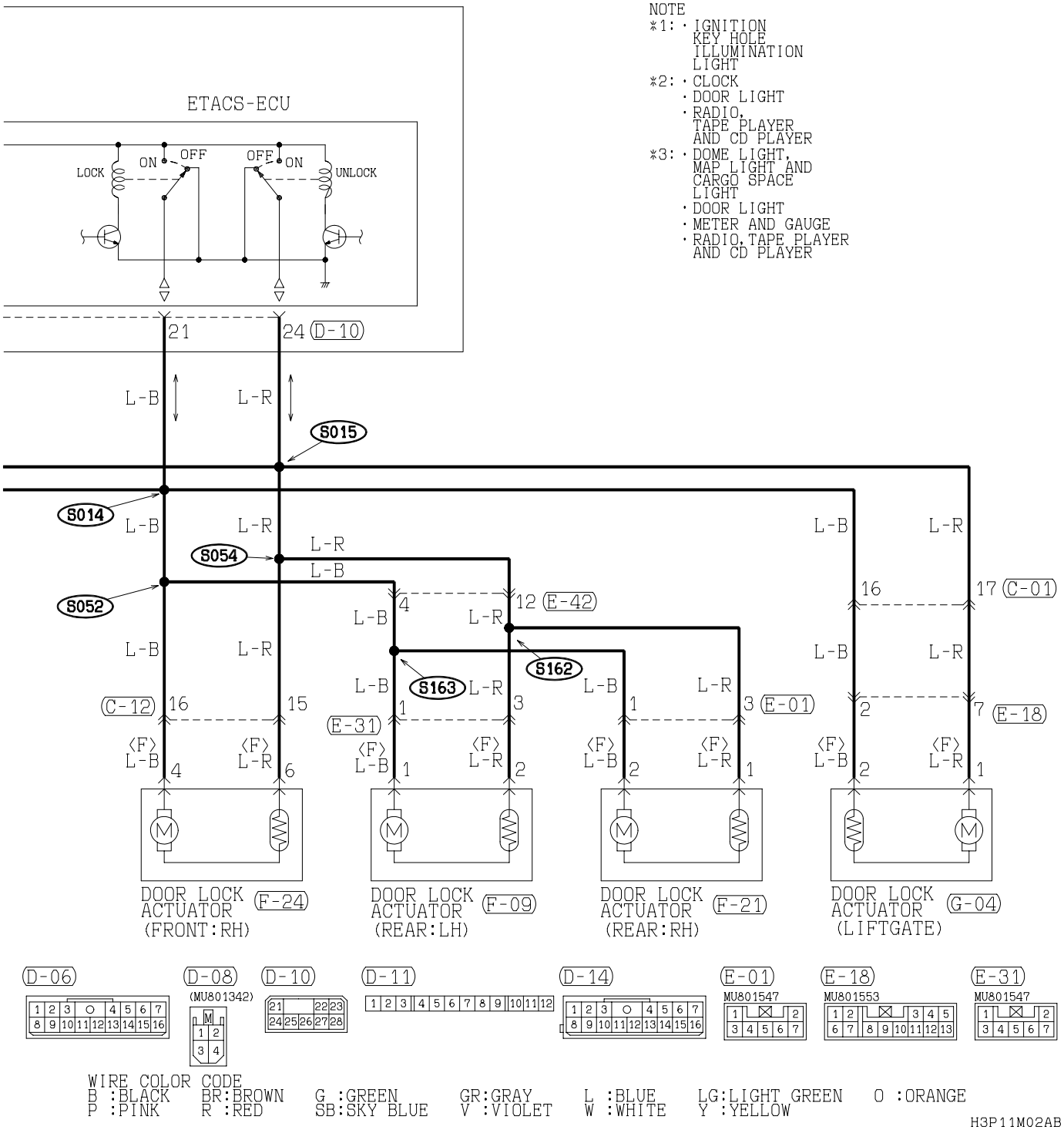

TSB Revision

CENTRAL DOOR LOCKING SYSTEM <VEHICLES WITHOUT KEYLESS ENTRY SYSTEM> (CONTINUED)

3

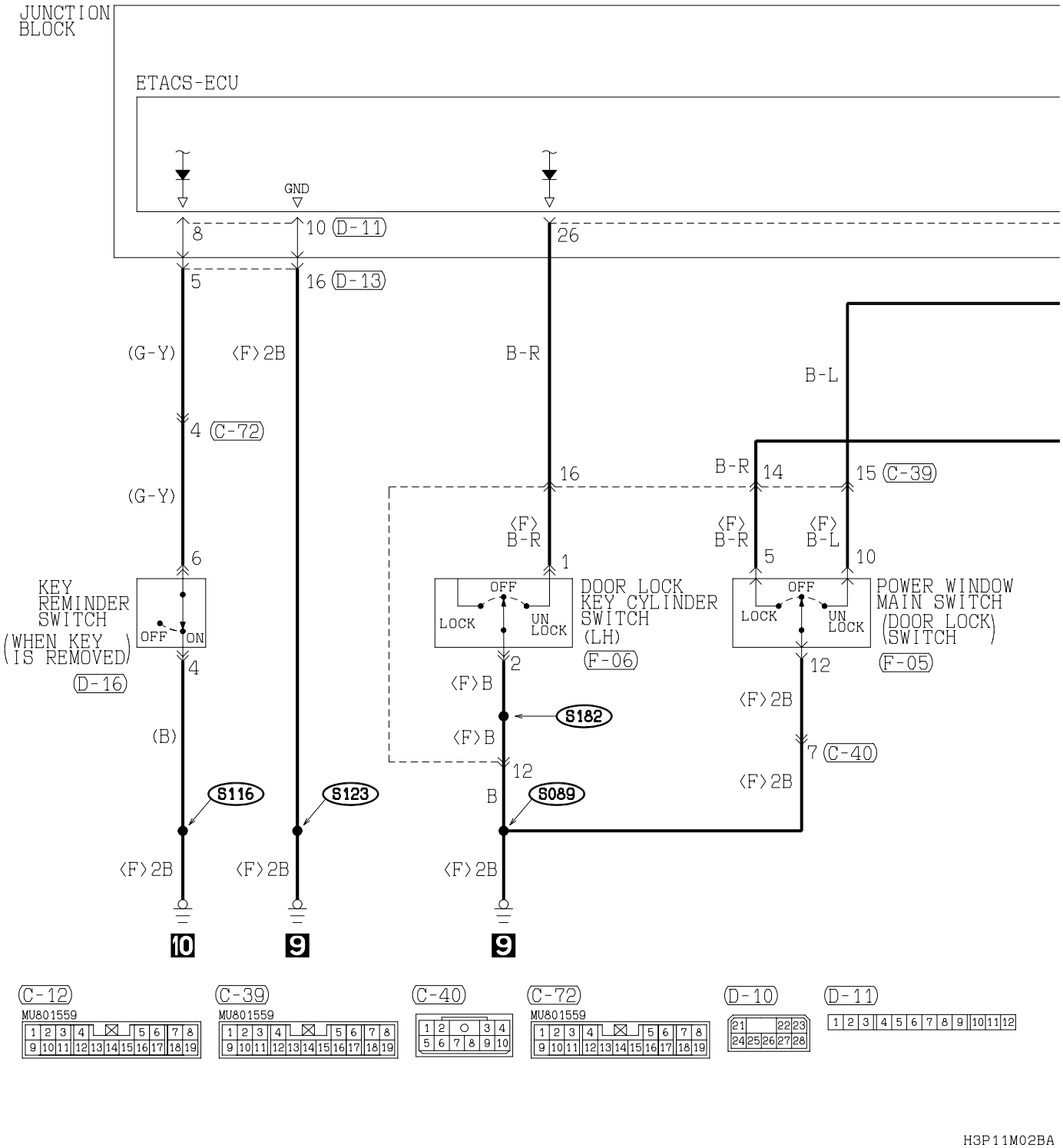

H3P11M02BA

TSB Revision

4

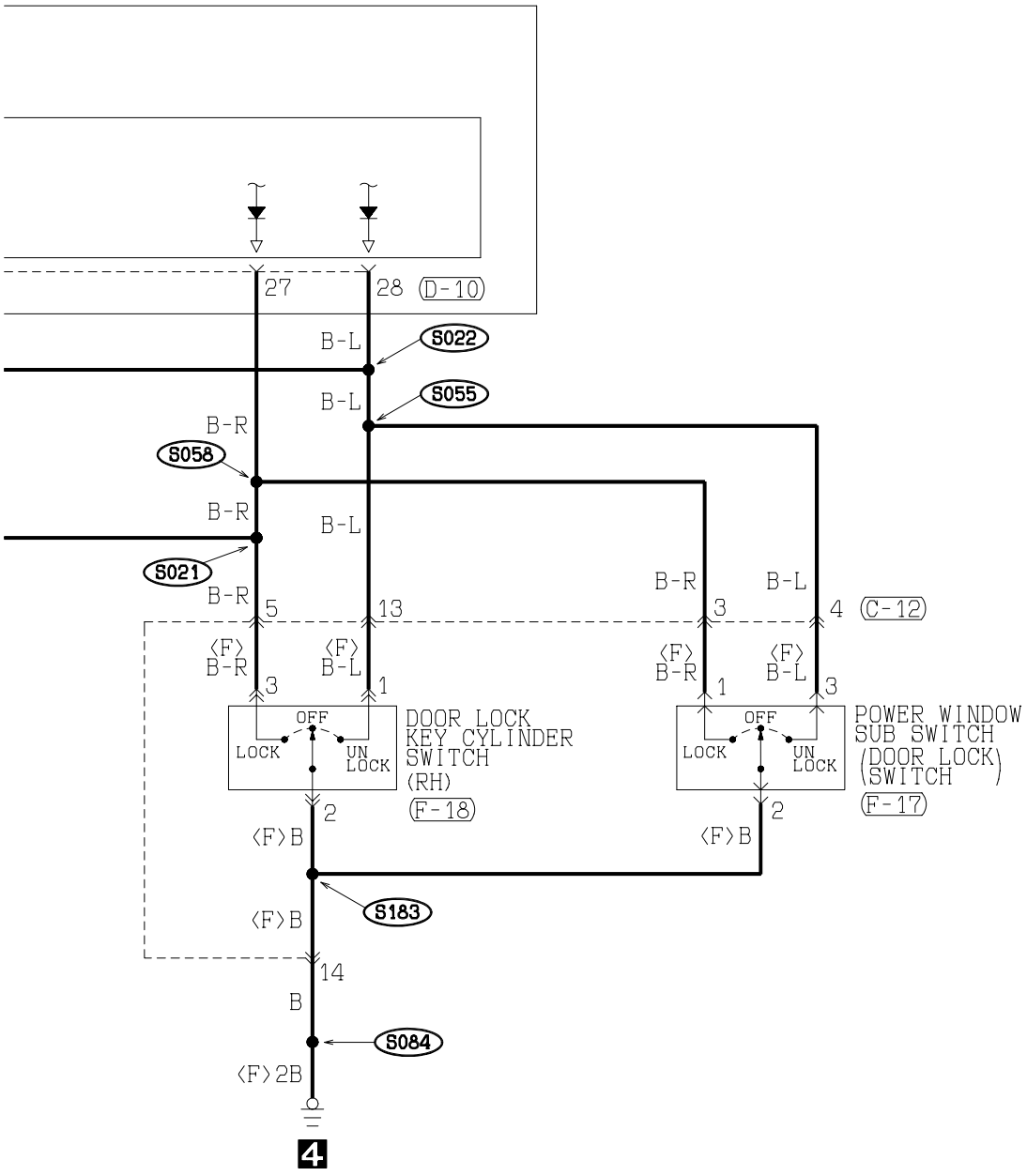

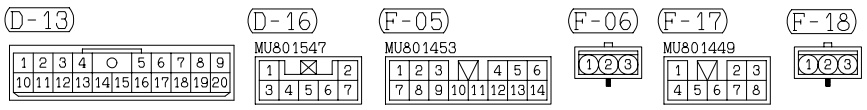

WIRE COLOR CODE
B :BLACK BR:BROWN G :GREEN GR:GRAY L :BLUE LG:LIGHT GREEN O :ORANGE
P :PINK R :RED SB:SKY BLUE V :VIOLET W :WHITE Y :YELLOW

H3P11M02BB

TSB Revision

CENTRAL DOOR LOCKING SYSTEM <VEHICLES WITH KEYLESS ENTRY SYSTEM>

M1901004700849

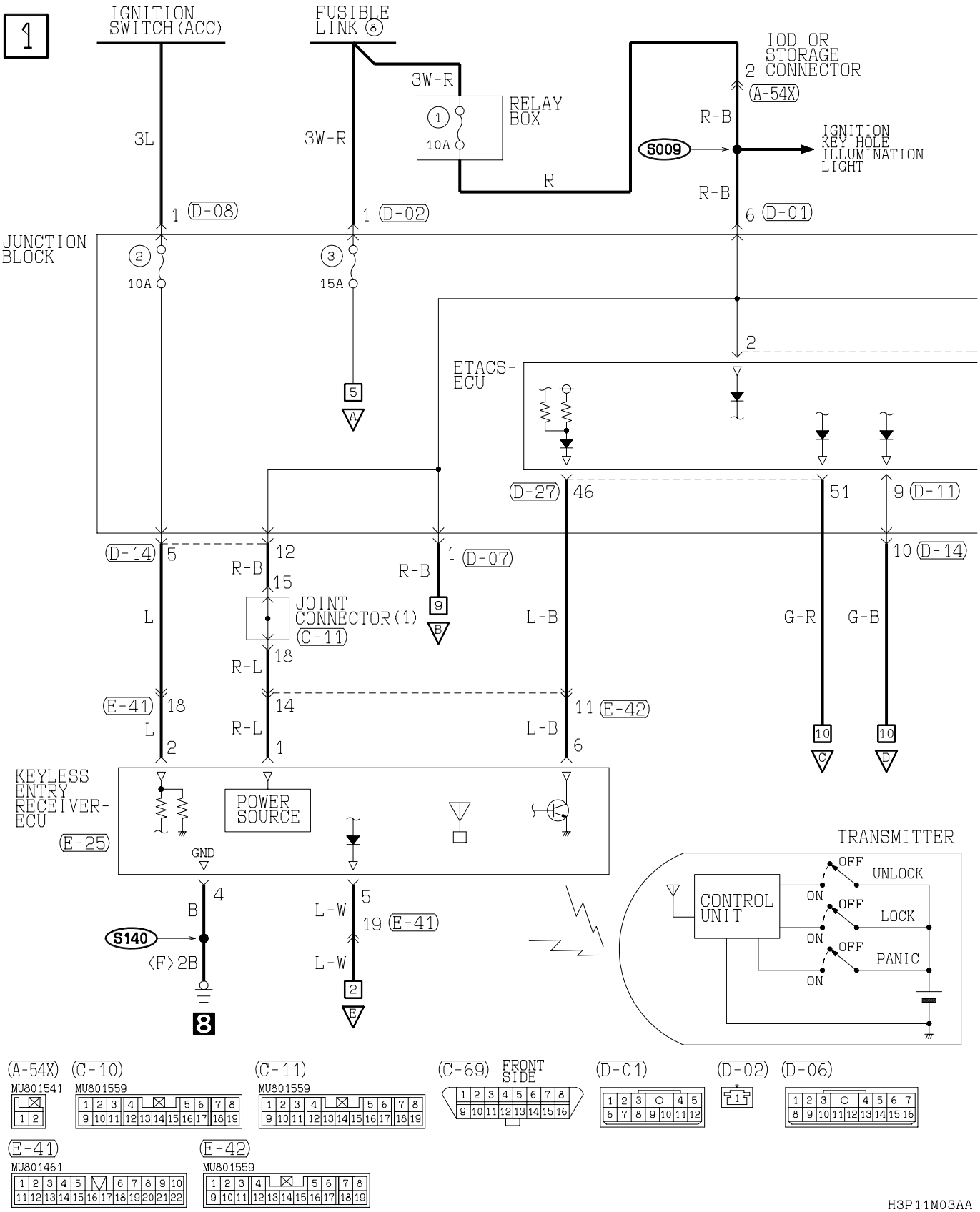

H3P11M03AA

TSB Revision

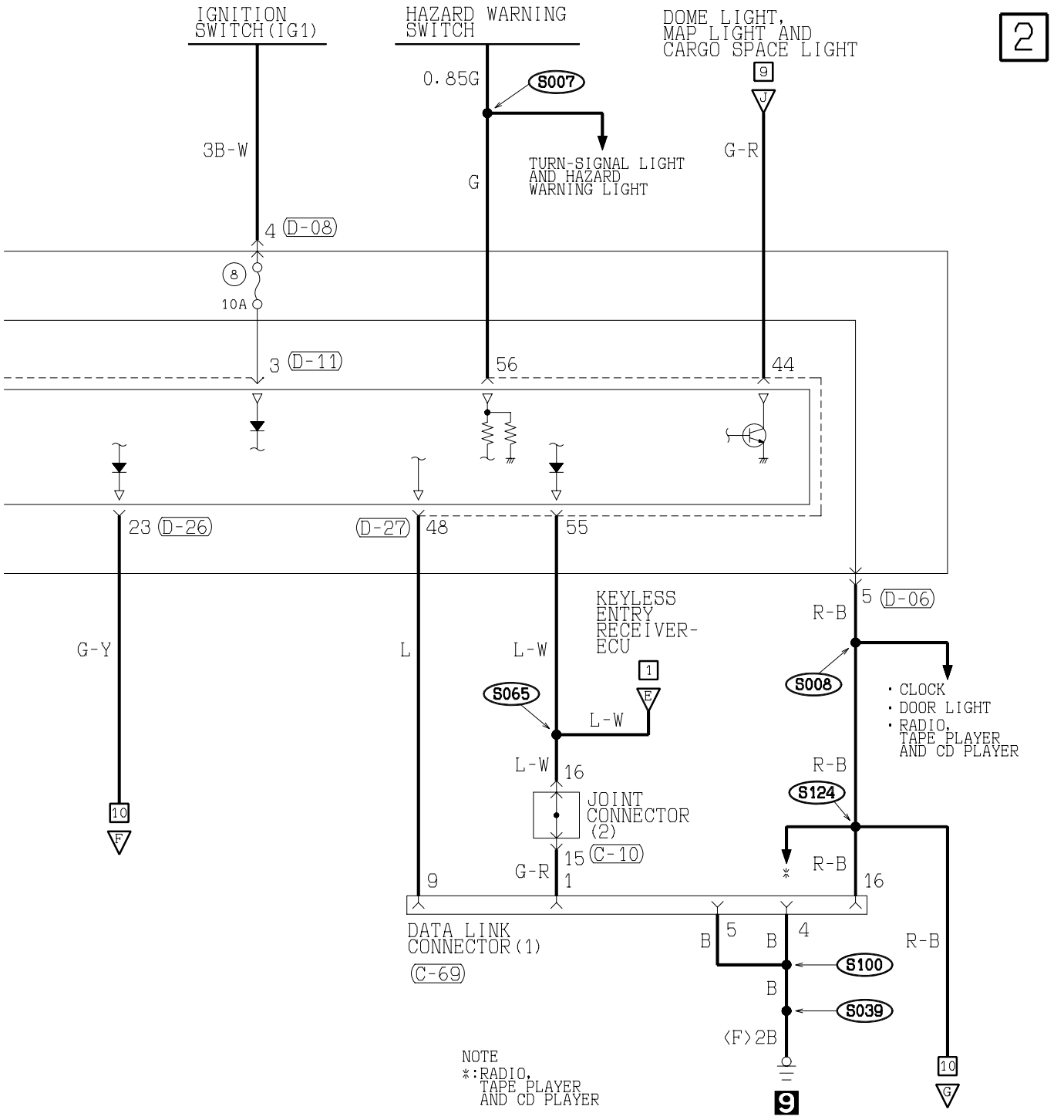

H3P11M03AB

TSB Revision

CENTRAL DOOR LOCKING SYSTEM <VEHICLES WITH KEYLESS ENTRY SYSTEM> (CONTINUED)

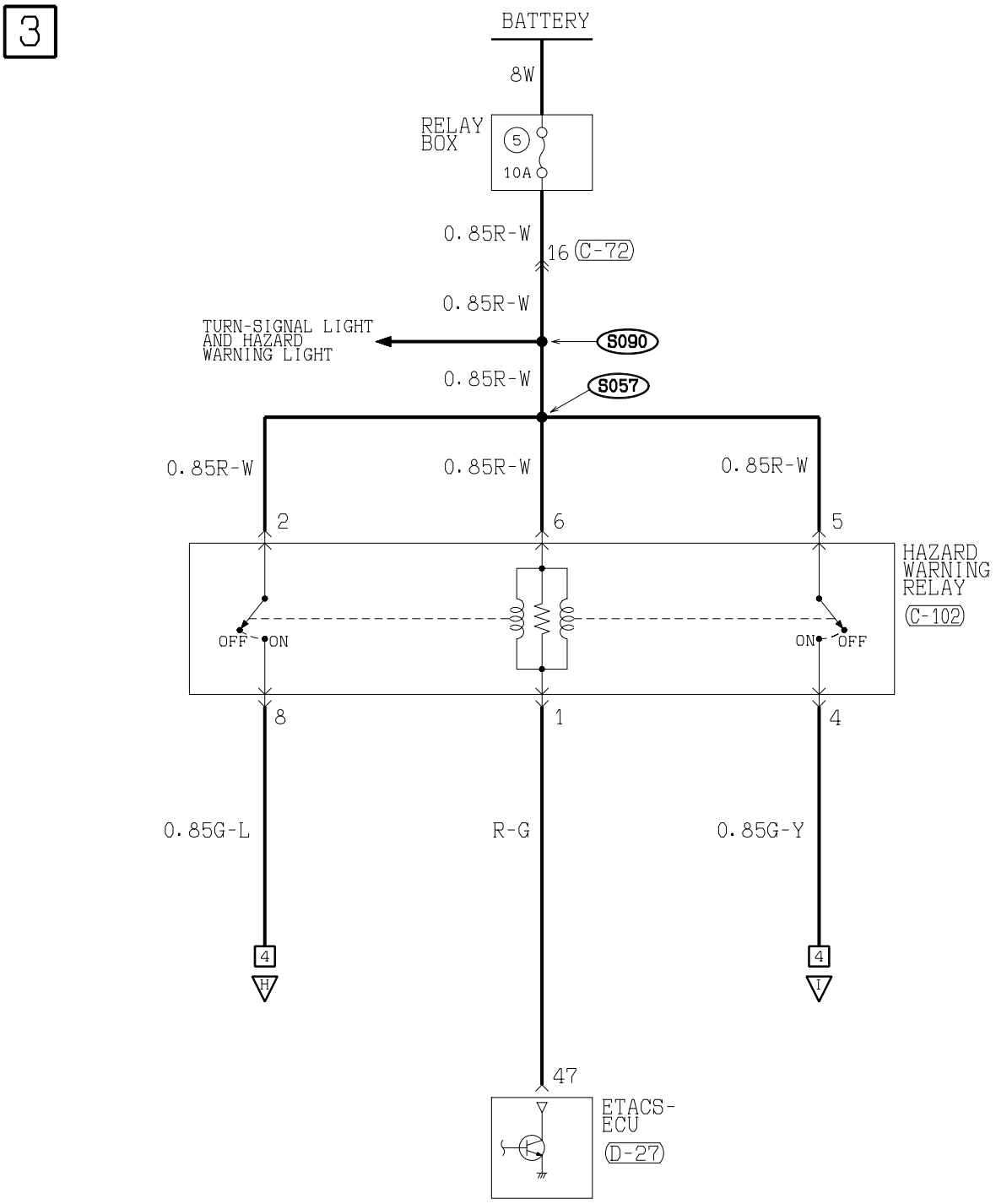

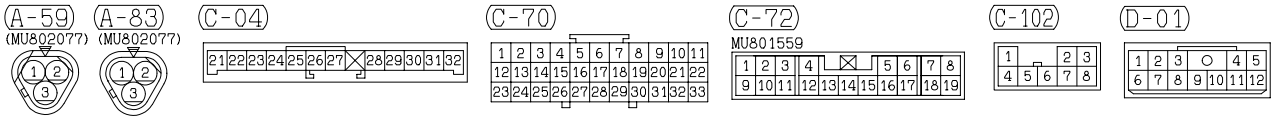

H3P11M03BA

TSB Revision

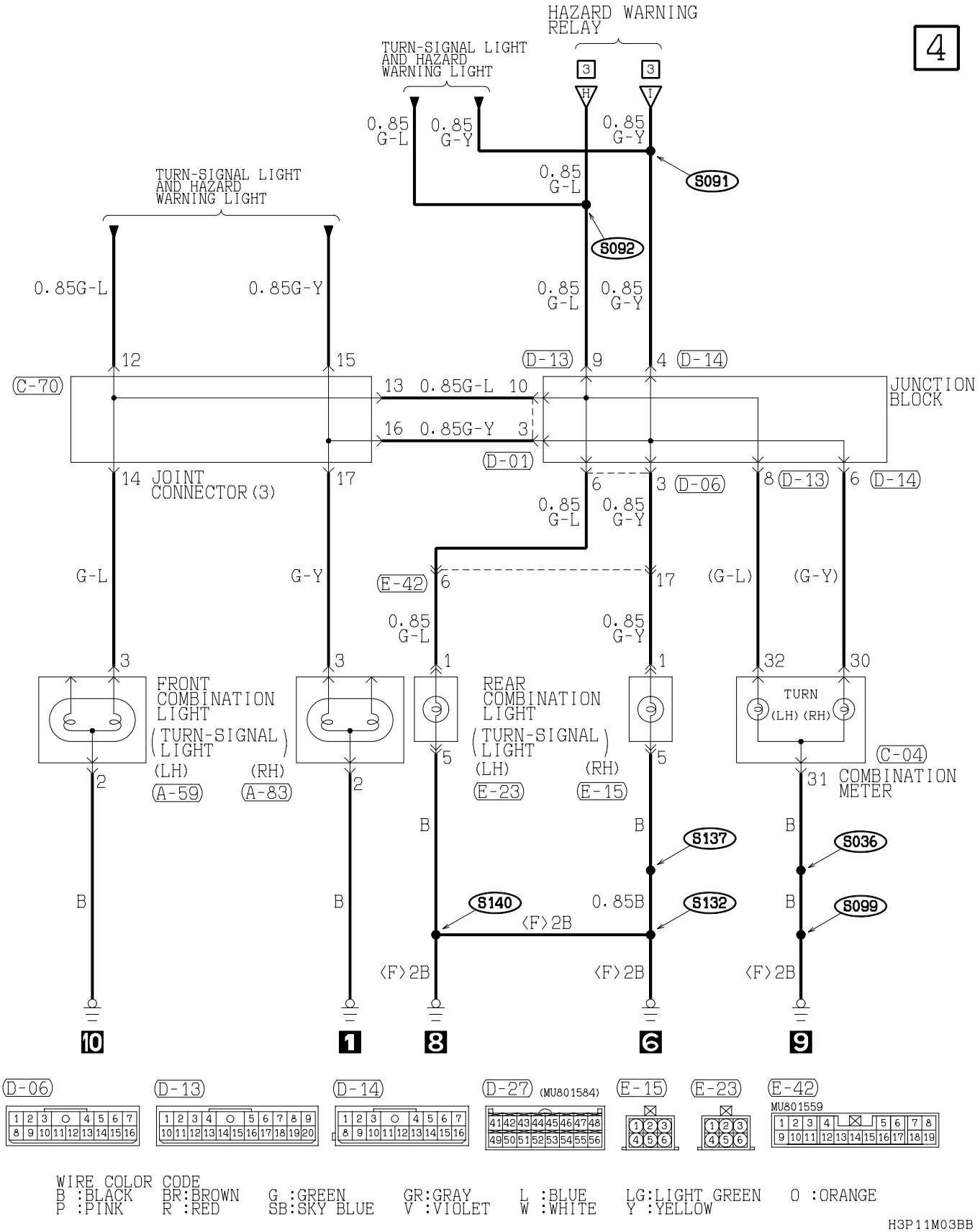

TSB Revision

CENTRAL DOOR LOCKING SYSTEM <VEHICLES WITH KEYLESS ENTRY SYSTEM> (CONTINUED)

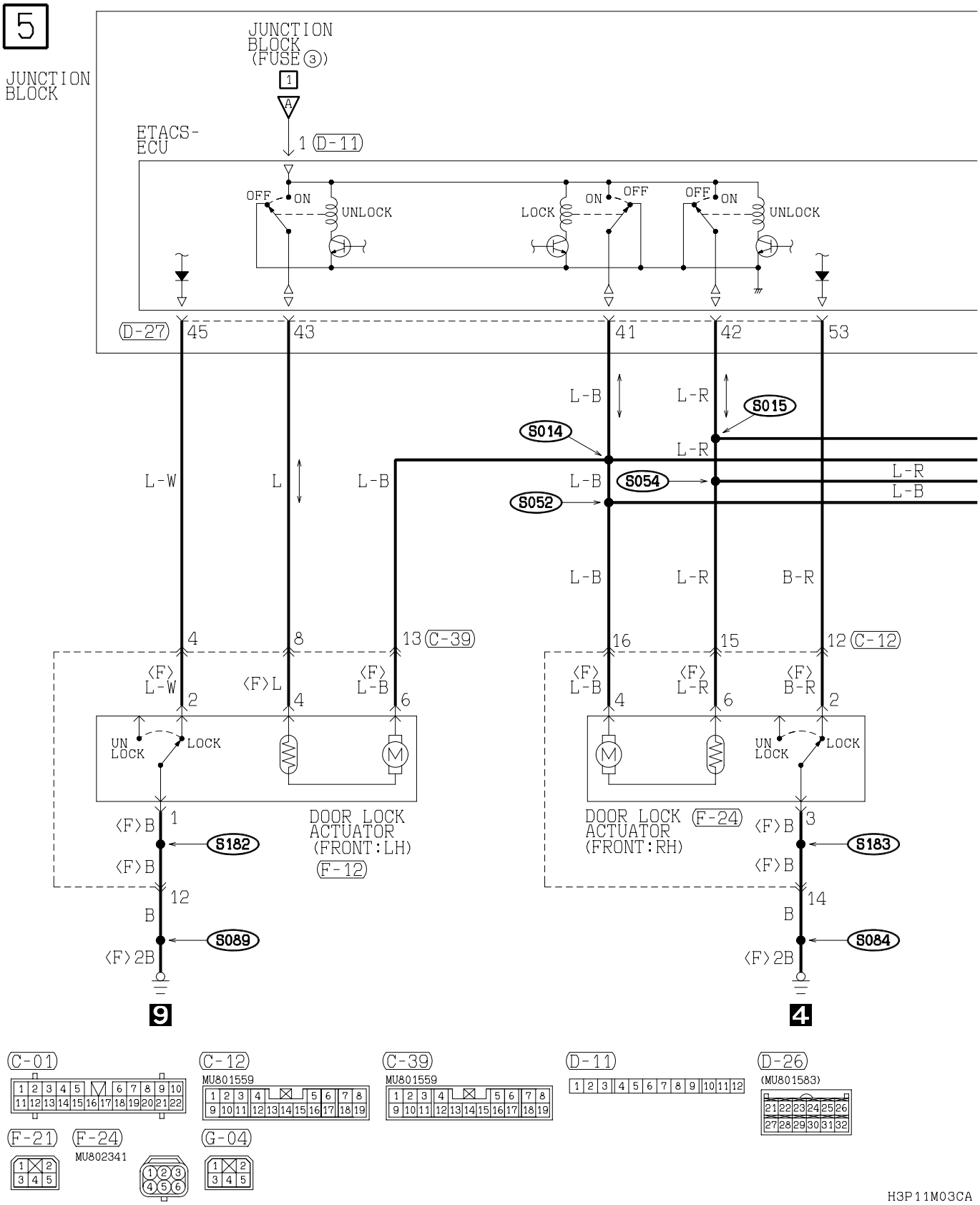

TSB Revision

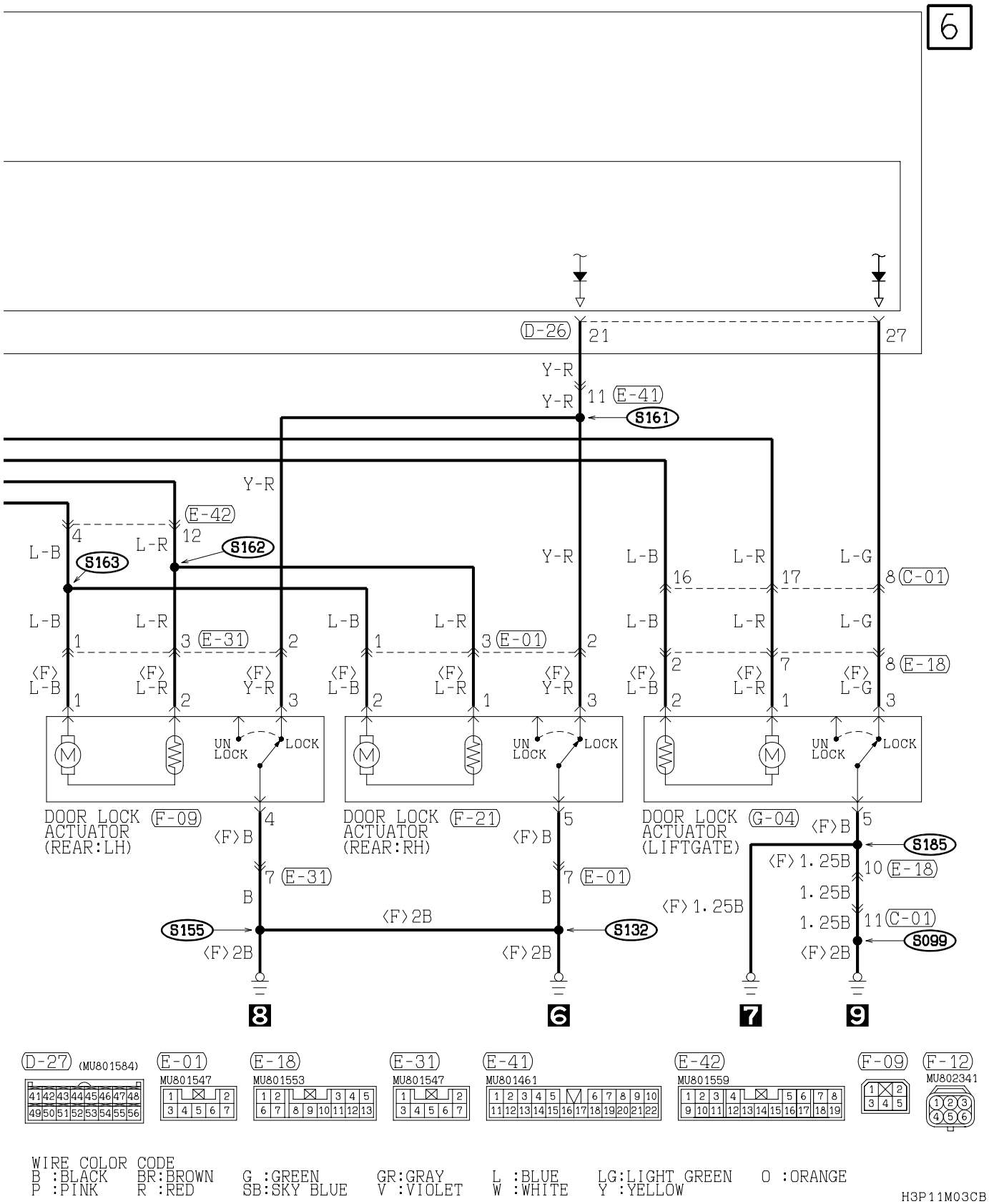

WIRE COLOR CODE
B :BLACK BR:BROWN G :GREEN GR:GRAY L :BLUE LG:LIGHT GREEN O :ORANGE
P :PINK R :RED SB:SKY BLUE V :VIOLET W :WHITE Y :YELLOW

H3P11M03CB

TSB Revision

CENTRAL DOOR LOCKING SYSTEM <VEHICLES WITH KEYLESS ENTRY SYSTEM> (CONTINUED)

7

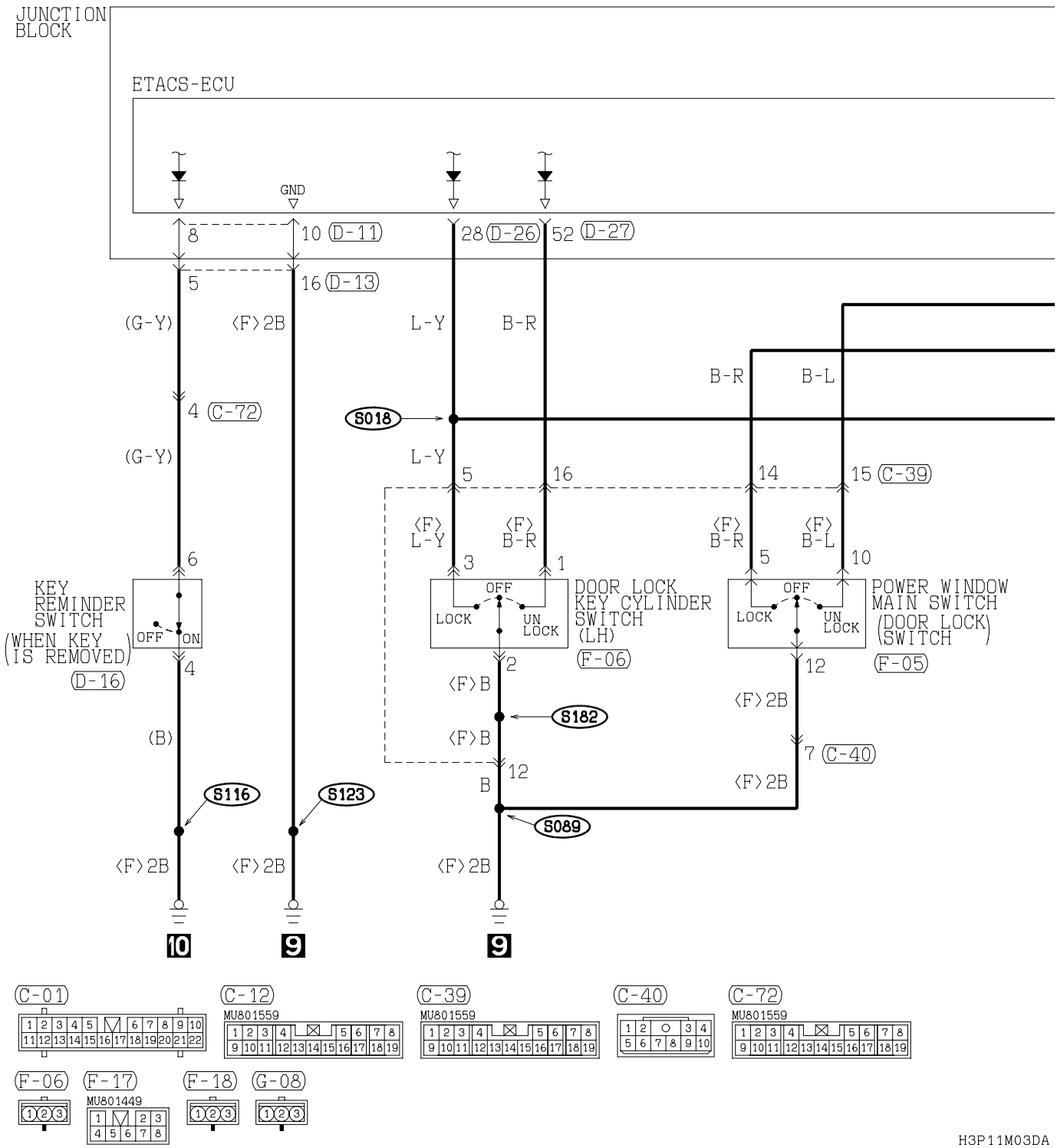

TSB Revision

8

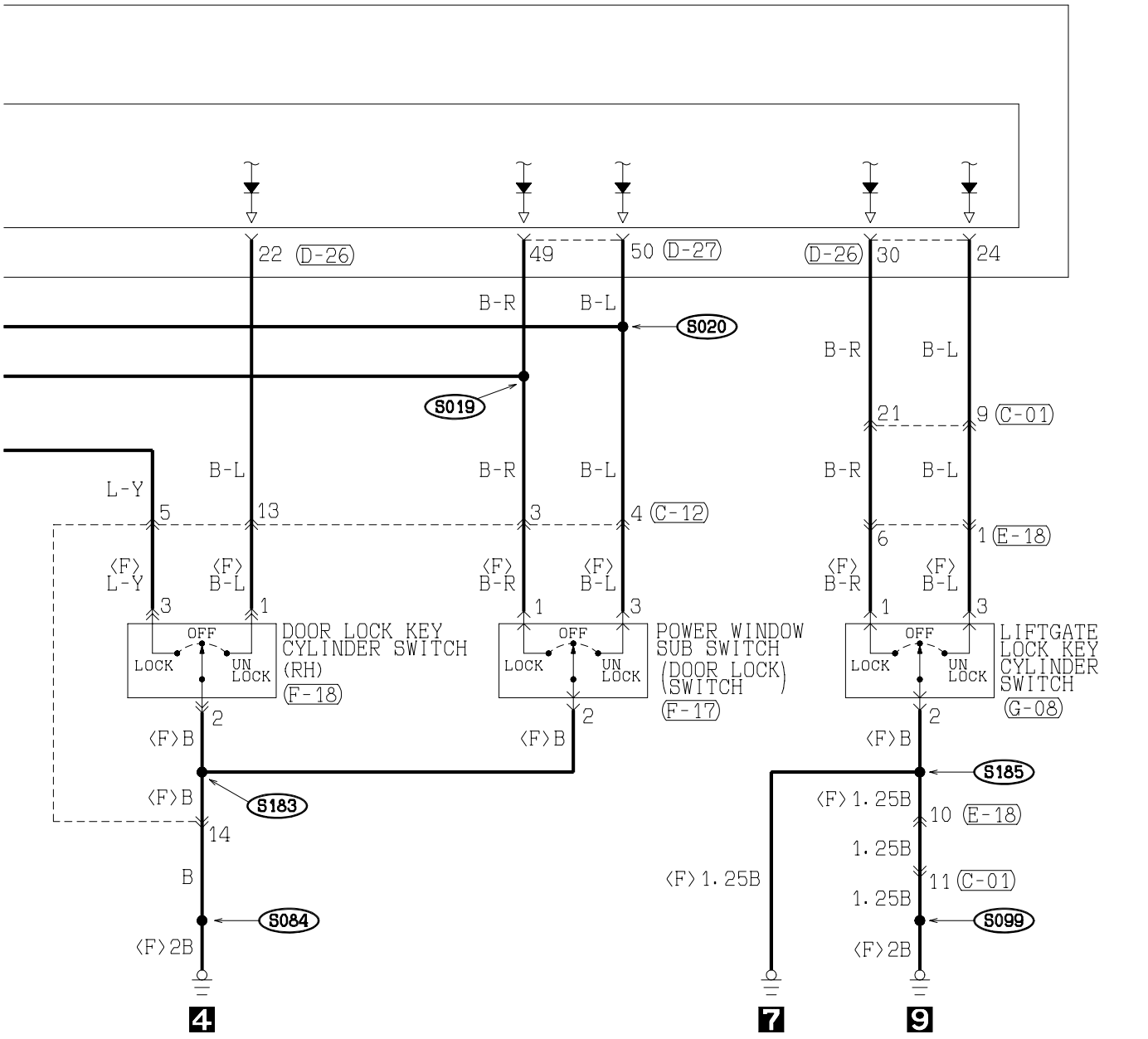

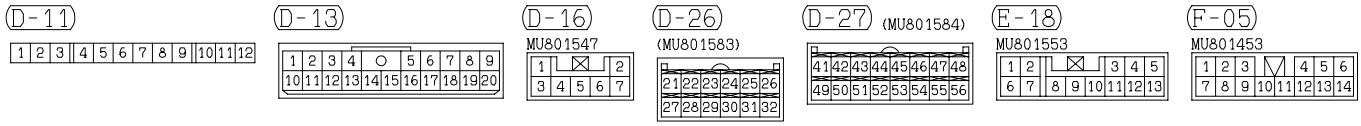

WIRE COLOR CODE

B :BLACK	BR:BROWN	G :GREEN	GR:GRAY	L :BLUE	LG:LIGHT GREEN	O :ORANGE	
P :PINK	R :RED	SB:SKY BLUE	V :VIOLET	W :WHITE	Y :YELLOW		

H3P11M03DB

TSB Revision

CENTRAL DOOR LOCKING SYSTEM <VEHICLES WITH KEYLESS ENTRY SYSTEM> (CONTINUED)

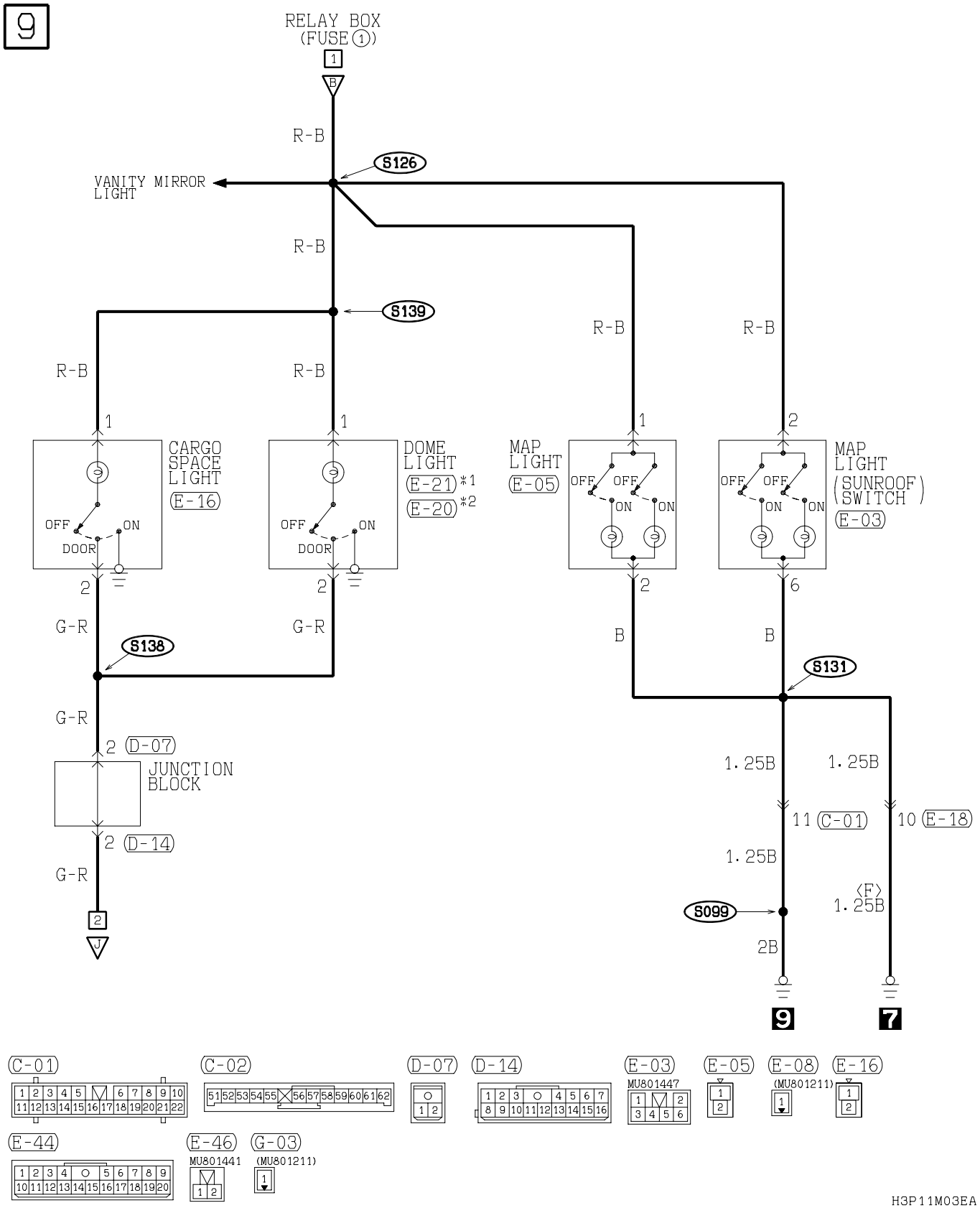

TSB Revision

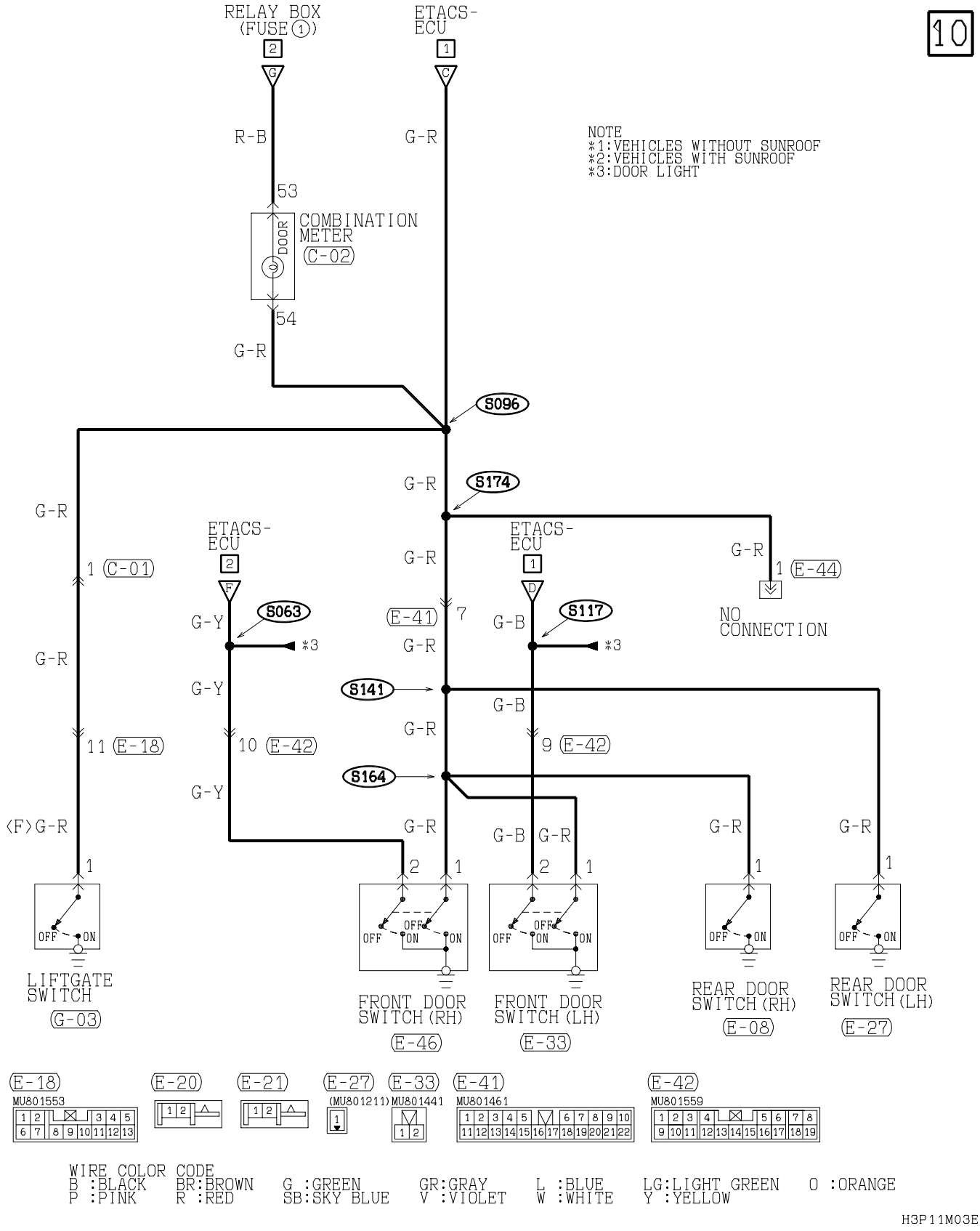

TSB Revision

CENTRAL DOOR LOCKING SYSTEM <VEHICLES WITH KEYLESS ENTRY SYSTEM> (CONTINUED)

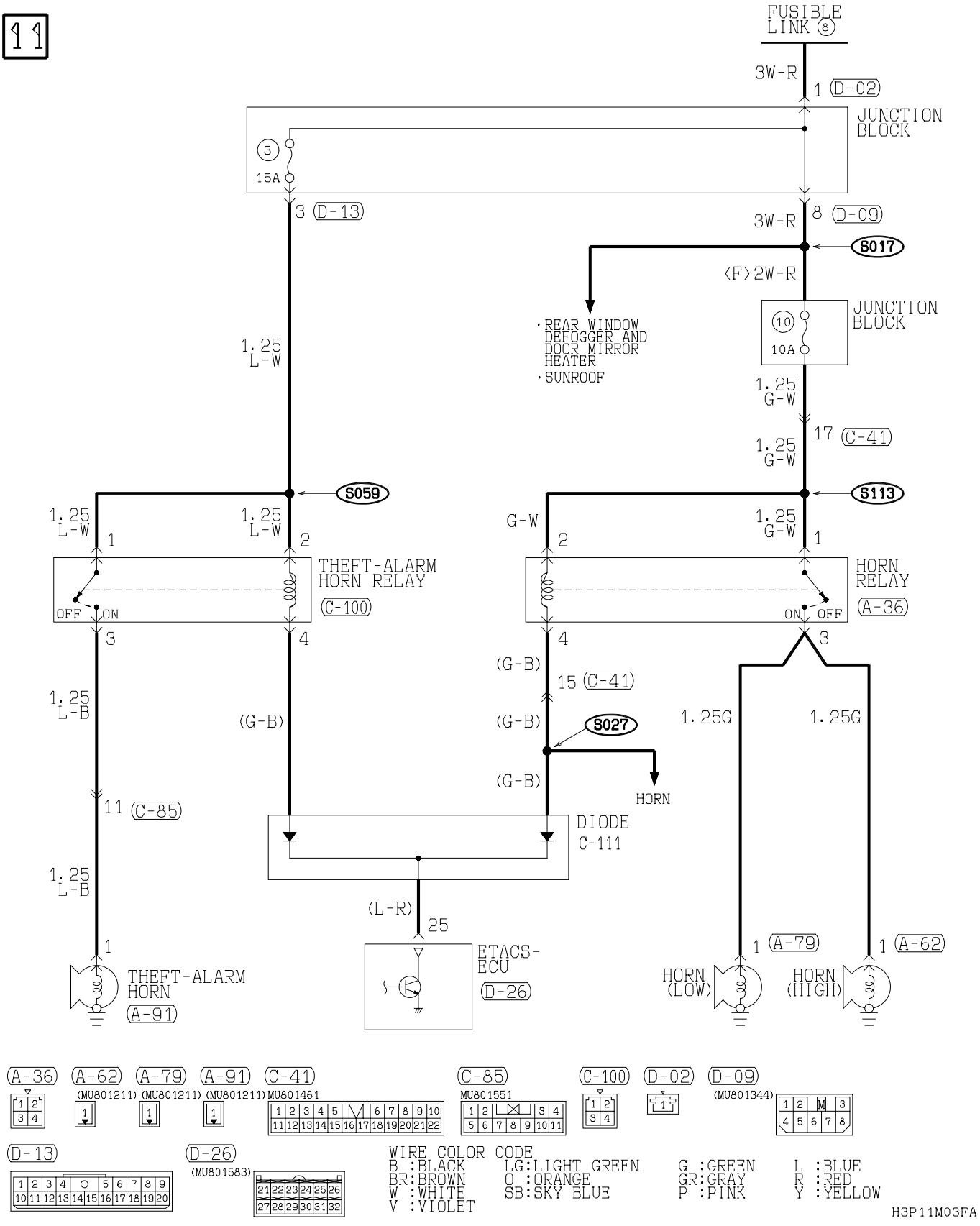

TSB Revision

NOTES

HEATER

M1901013300203

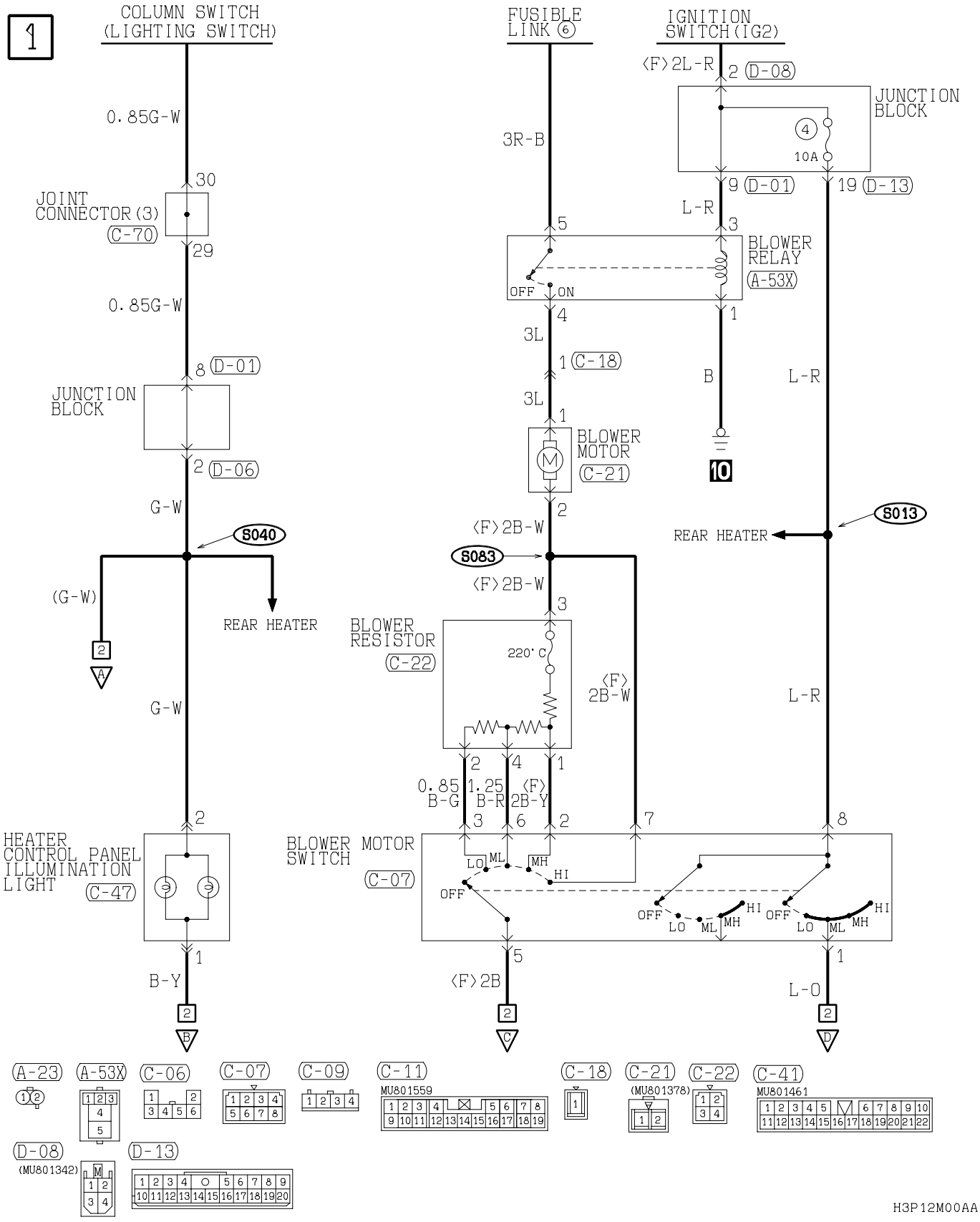

TSB Revision

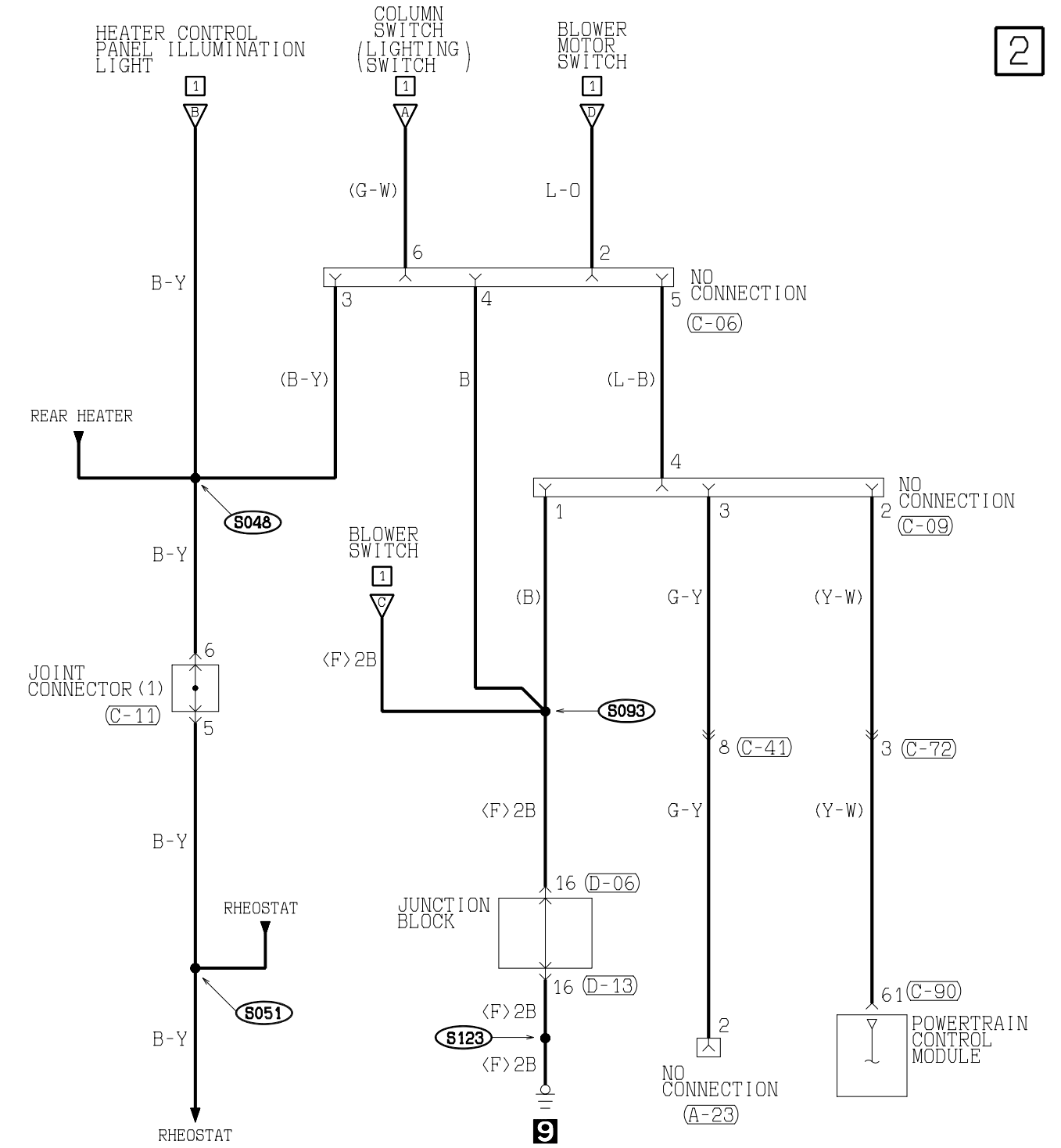

WIRE COLOR CODE

B :BLACK	BR:BROWN	G :GREEN	GR:GRAY	L :BLUE	LG:LIGHT GREEN	O :ORANGE	
P :PINK	R :RED	SB:SKY BLUE	V :VIOLET	W :WHITE	Y :YELLOW		

H3P12M00AB

TSB Revision

AIR CONDITIONING SYSTEM

M1901005500774

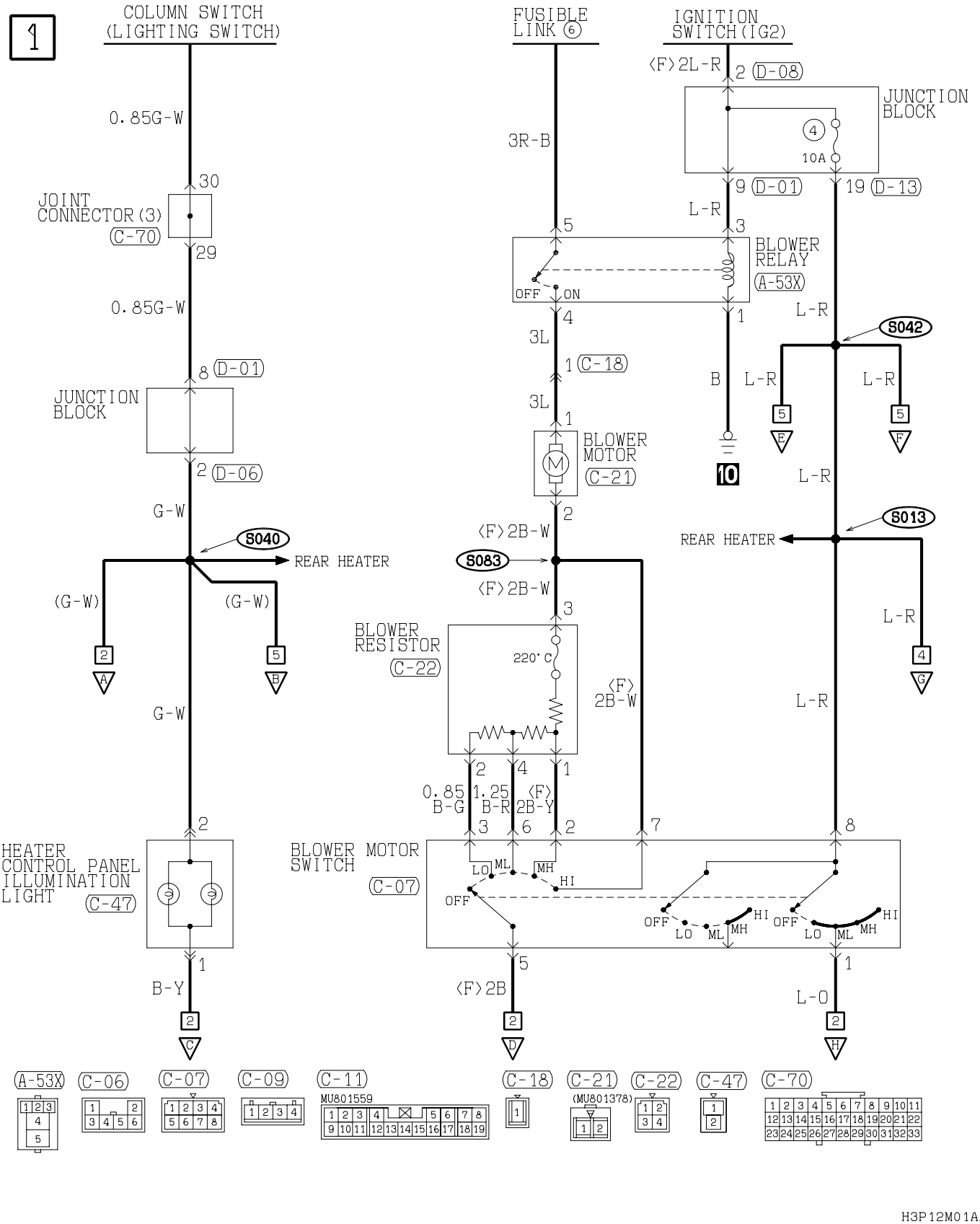

H3P12M01AA

TSB Revision

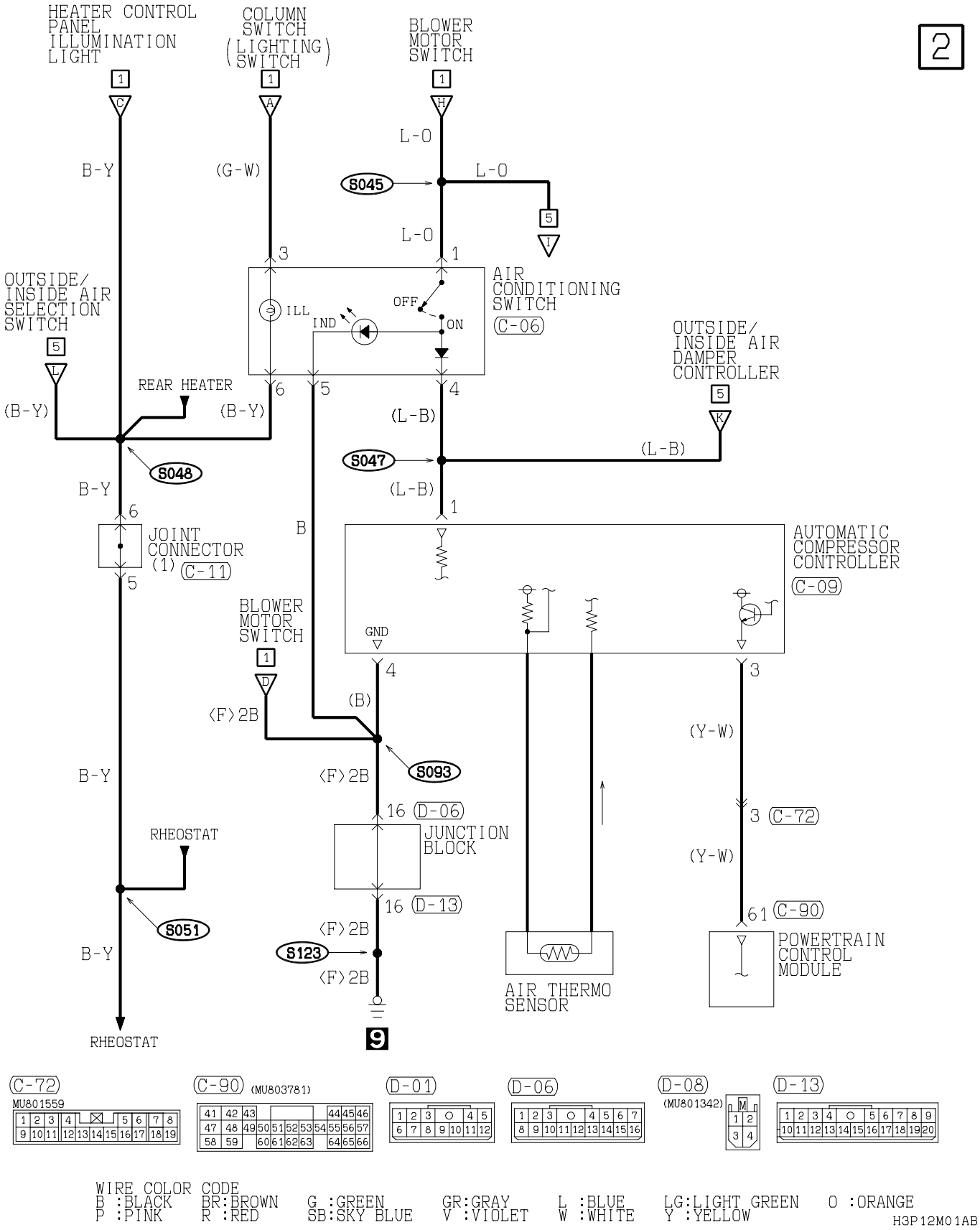

TSB Revision

AIR CONDITIONING SYSTEM (CONTINUED)

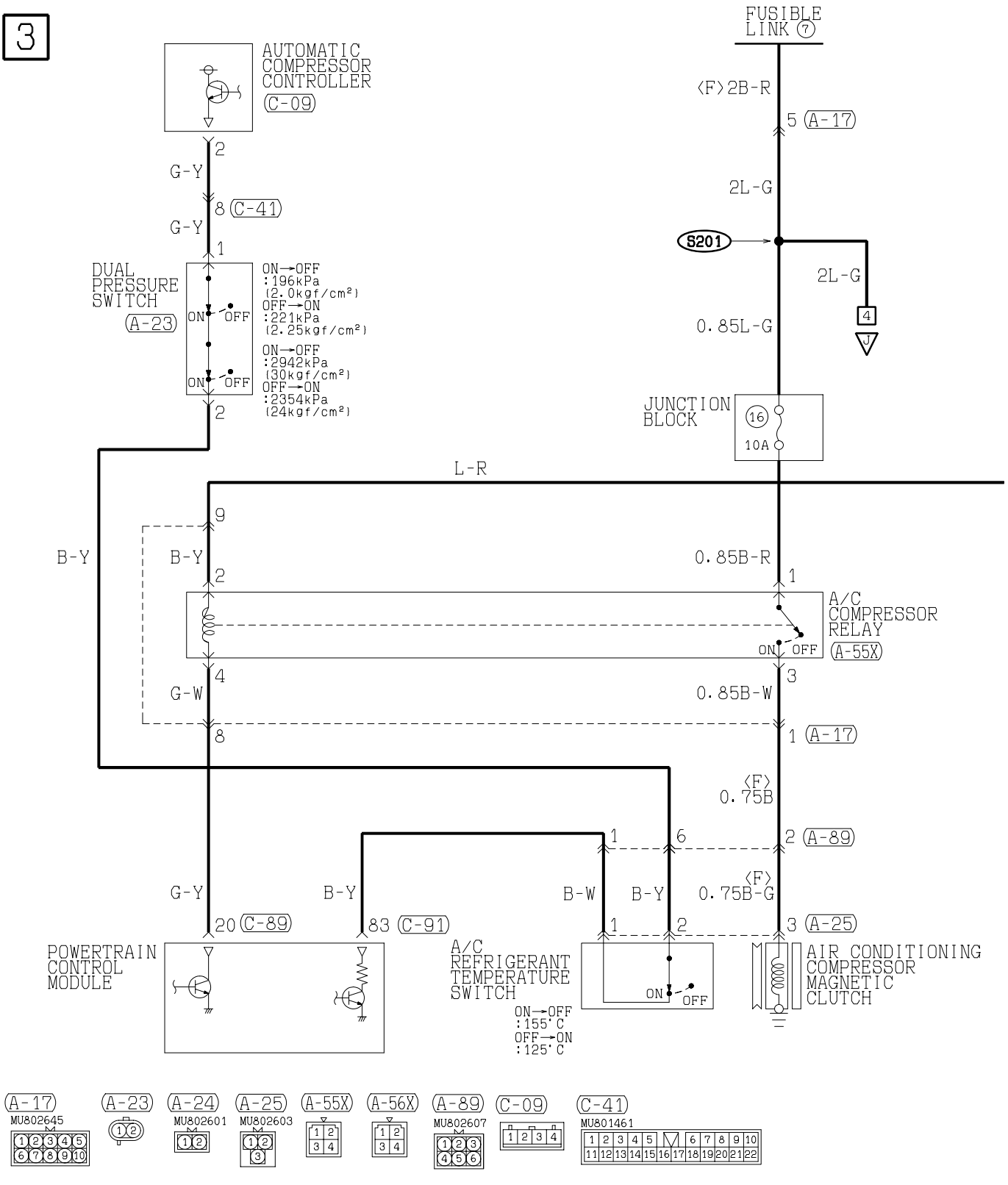

H3P12M01BA

TSB Revision

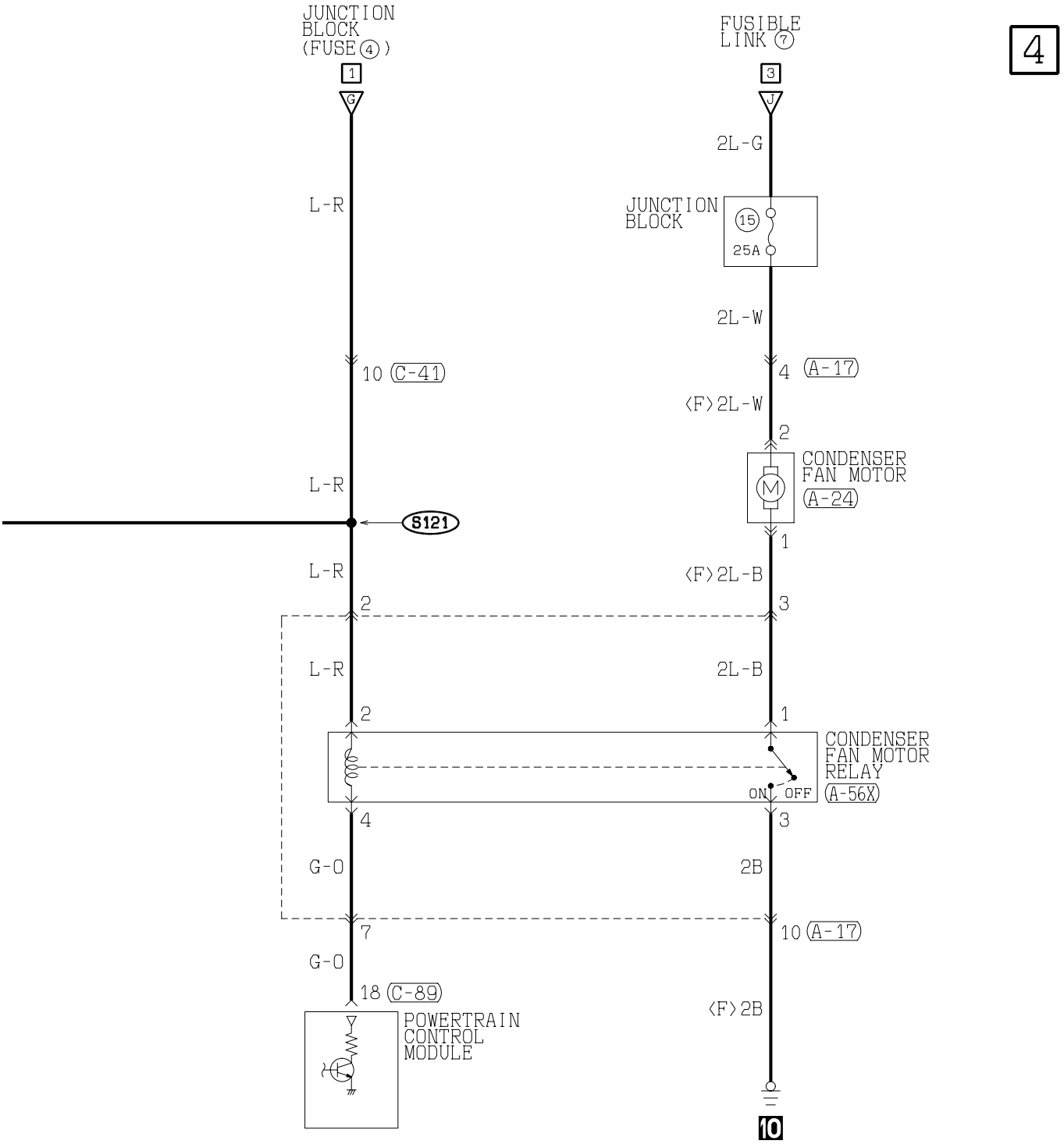

C-89 (MU803784)

1	2		3	4				5	6		7	8		
9	10	11	12	13	14	15	16	17	18	19	20	21	22	23
24	25		26	27	28	29		30	31	32	33		34	35

C-91 (MU803782)

71	72	73	74								75	76	77	
78	79	80	81	82	83	84	85	86	87	88	89			
90	91		92	93	94		95	96		97	98			

WIRE COLOR CODE
B :BLACK BR:BROWN G :GREEN GR:GRAY L :BLUE LG:LIGHT GREEN O :ORANGE
P :PINK R :RED SB:SKY BLUE V :VIOLET W :WHITE Y :YELLOW

H3P12M01BB

TSB Revision

AIR CONDITIONING SYSTEM (CONTINUED)

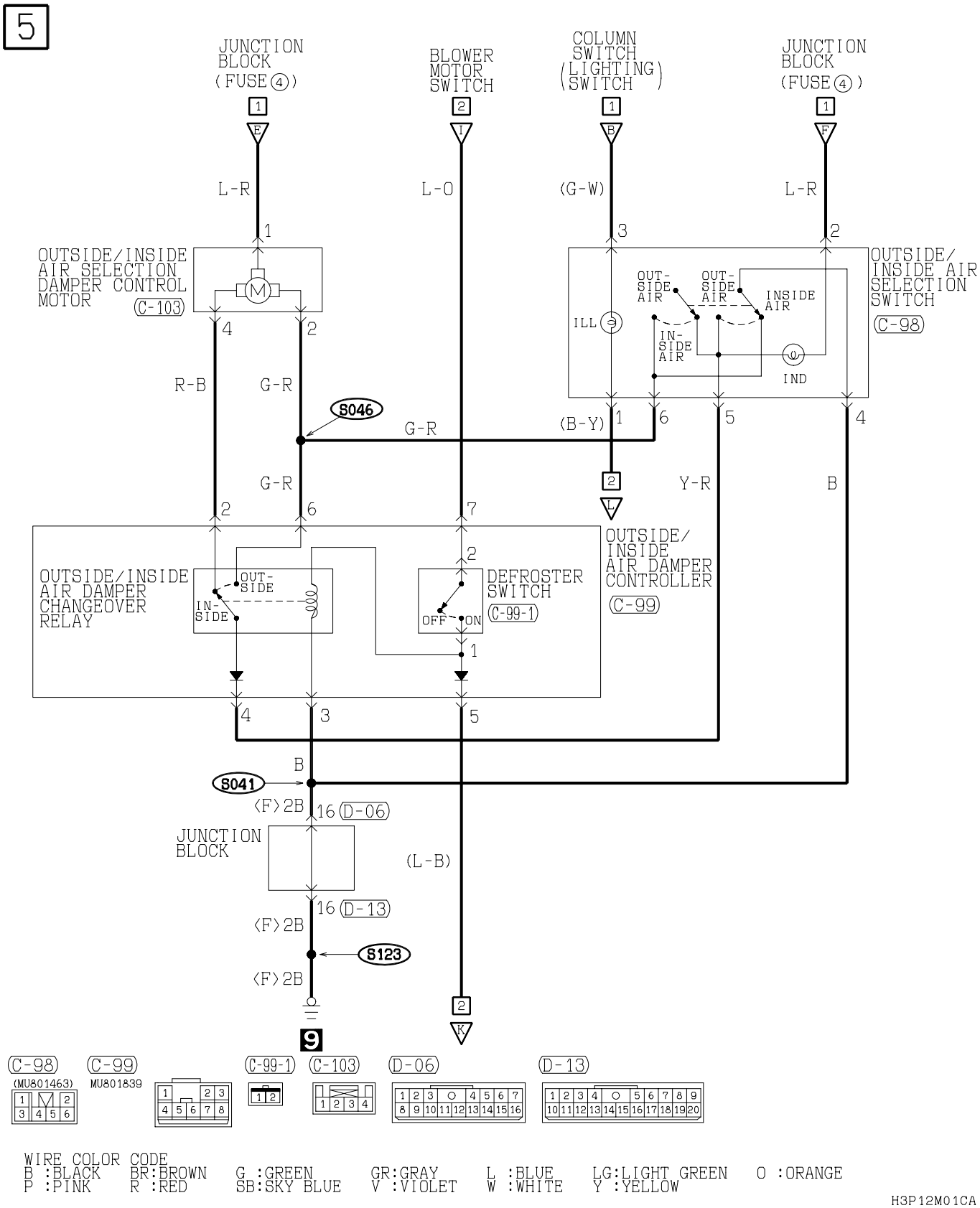

WIRE COLOR CODE

B :BLACK	BR:BROWN	G :GREEN	GR:GRAY	L :BLUE	LG:LIGHT GREEN	O :ORANGE	
P :PINK	R :RED	SB:SKY BLUE	V :VIOLET	W :WHITE	Y :YELLOW		

H3P12M01CA

NOTES

REAR HEATER

M1901015300113

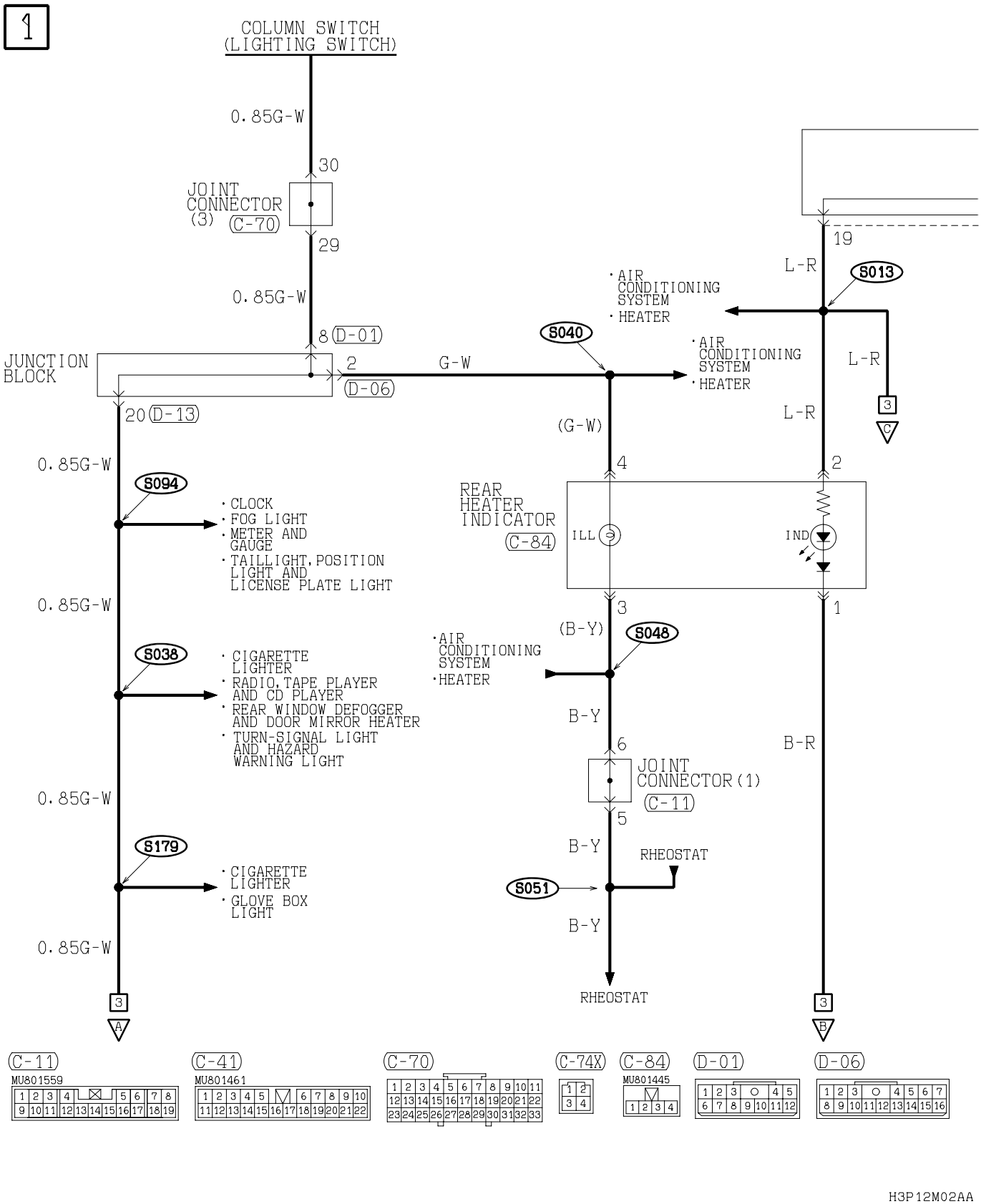

H3P12M02AA

TSB Revision

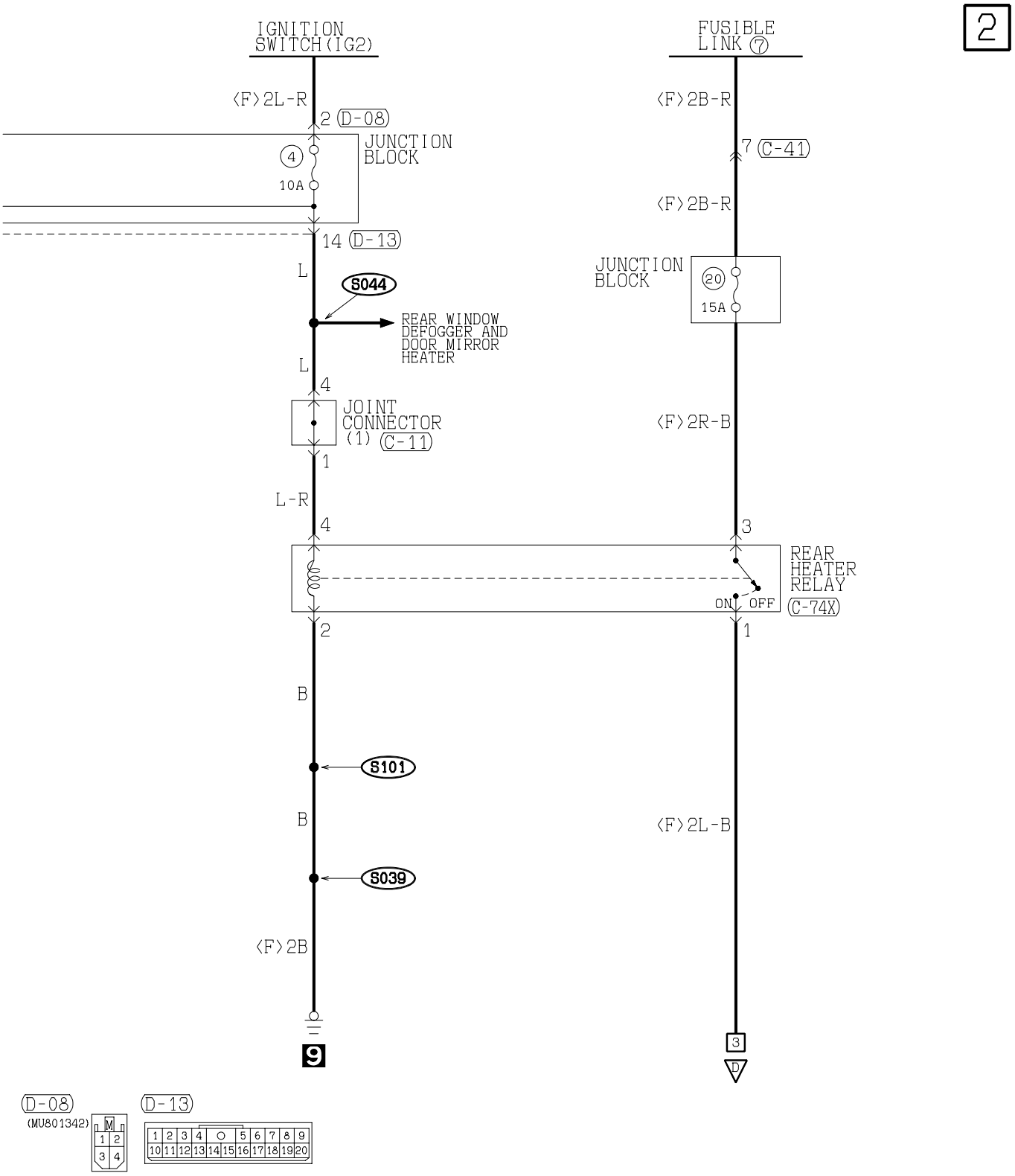

WIRE COLOR CODE

B :BLACK	BR:BROWN	G :GREEN	GR:GRAY	L :BLUE	LG:LIGHT GREEN	O :ORANGE	
P :PINK	R :RED	SB:SKY BLUE	V :VIOLET	W :WHITE	Y :YELLOW		

H3P12M02AB

TSB Revision

REAR HEATER (CONTINUED)

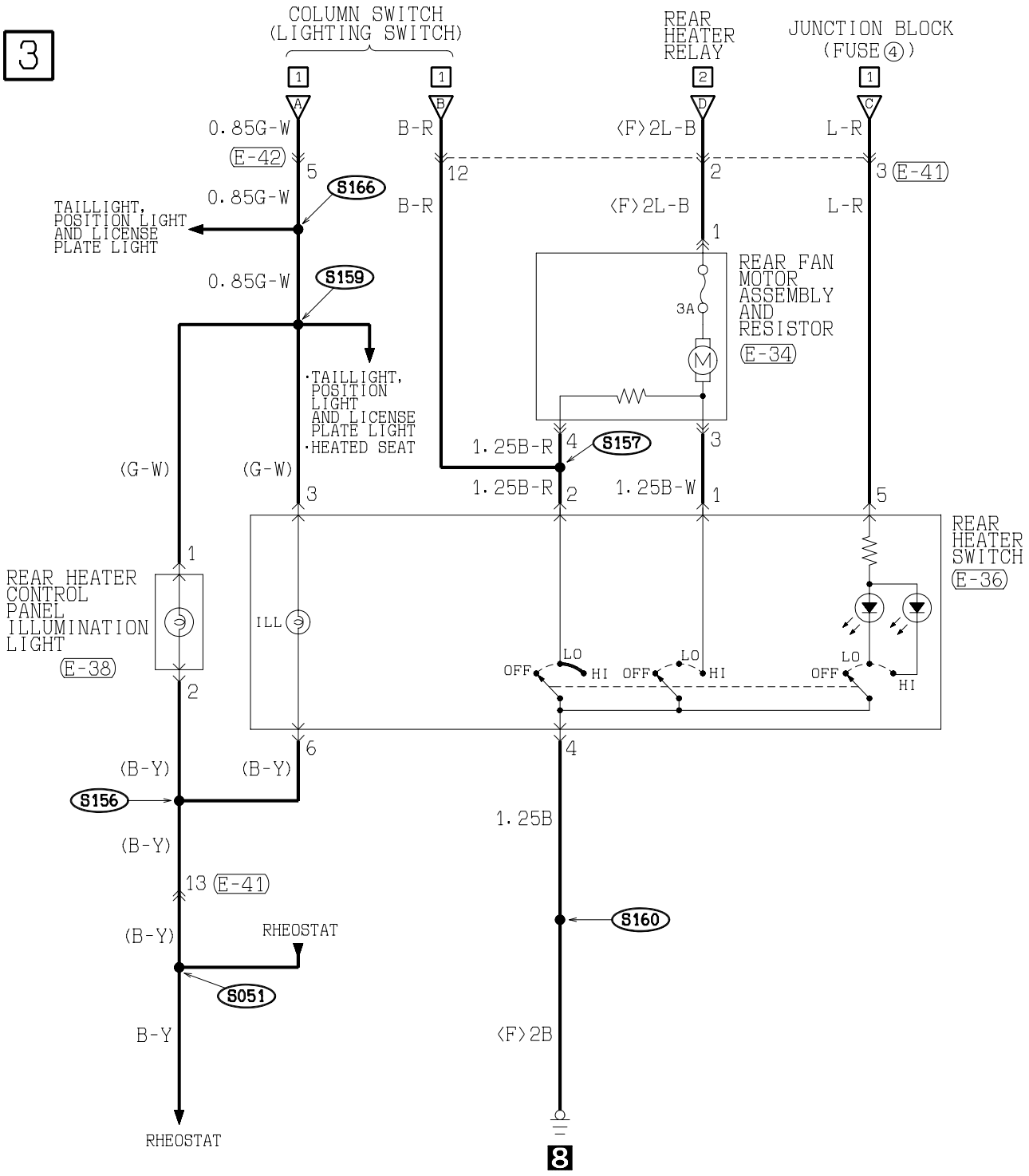

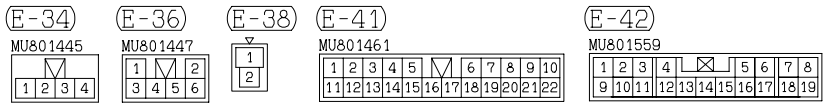

WIRE COLOR CODE

B :BLACK	BR:BROWN	G :GREEN	GR:GRAY	L :BLUE	LG:LIGHT GREEN	O :ORANGE	
P :PINK	R :RED	SB:SKY BLUE	V :VIOLET	W :WHITE	Y :YELLOW		

H3P12M02BA

WINDSHIELD WIPER AND WASHER

M1901006100445

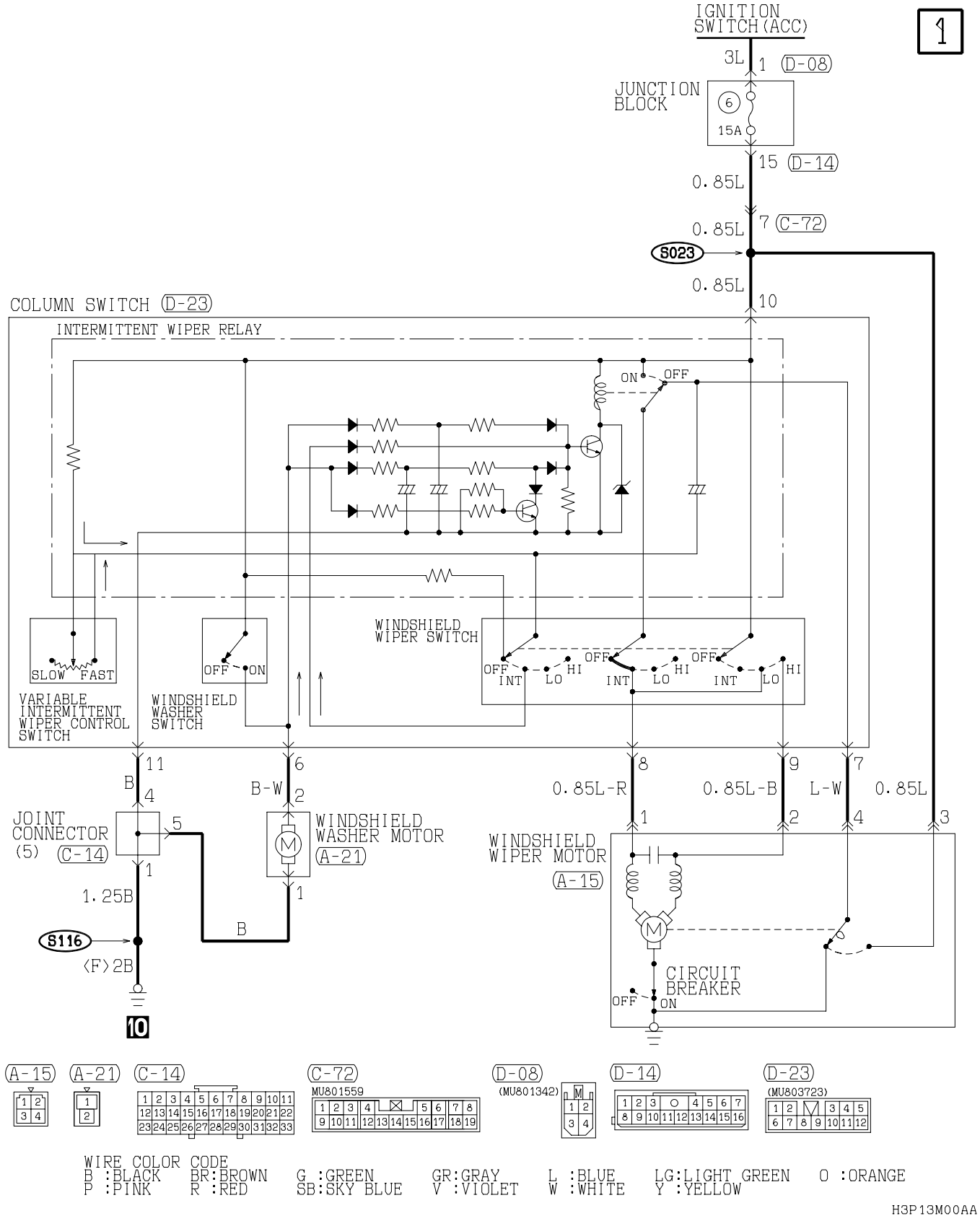

WIRE COLOR CODE

B :BLACK	BR:BROWN	G :GREEN	GR:GRAY	L :BLUE	LG:LIGHT GREEN	O :ORANGE
P :PINK	R :RED	SB:SKY BLUE	V :VIOLET	W :WHITE	Y :YELLOW	

H3P13M00AA

TSB Revision

REAR WIPER AND WASHER

M1901006200389

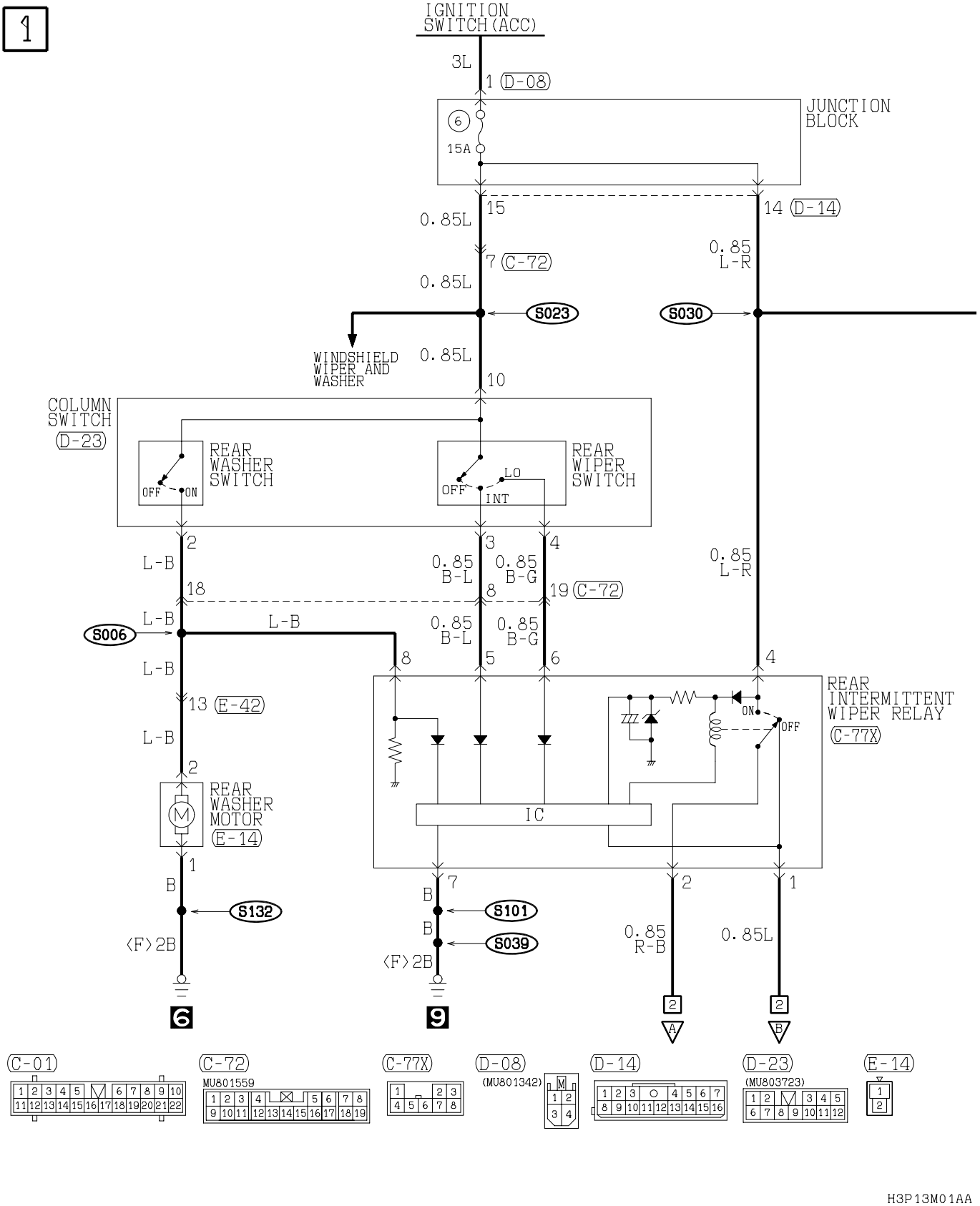

H3P13M01AA

TSB Revision

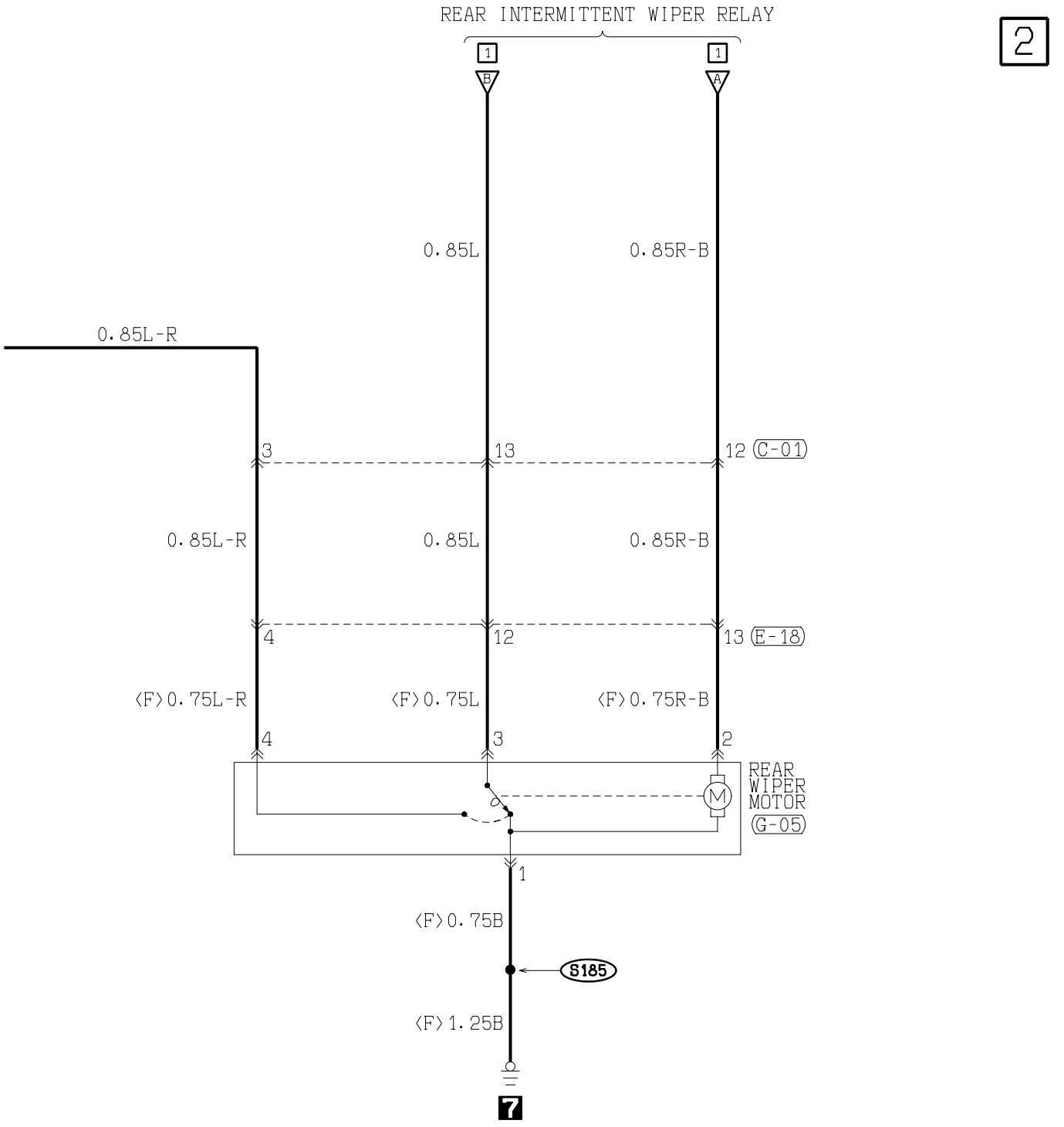

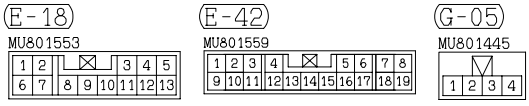

WIRE COLOR CODE

B :BLACK	BR:BROWN	G :GREEN	GR:GRAY	L :BLUE	LG:LIGHT GREEN	O :ORANGE
P :PINK	R :RED	SB:SKY BLUE	V :VIOLET	W :WHITE	Y :YELLOW	

H3P13M01AB

TSB Revision

REAR WINDOW DEFOGGER AND DOOR MIRROR HEATER

M1901013500315

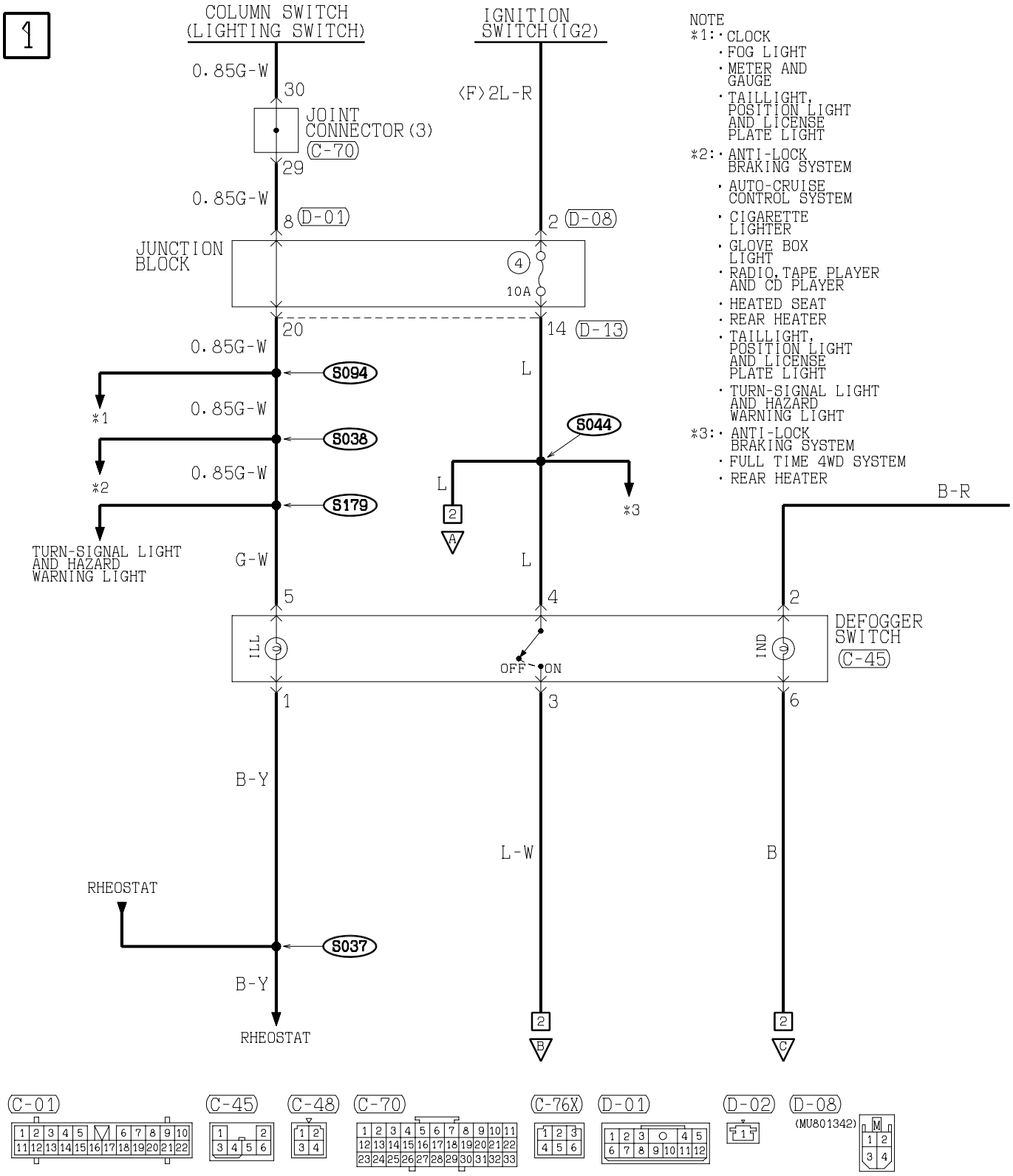

H3P13M02AA

TSB Revision

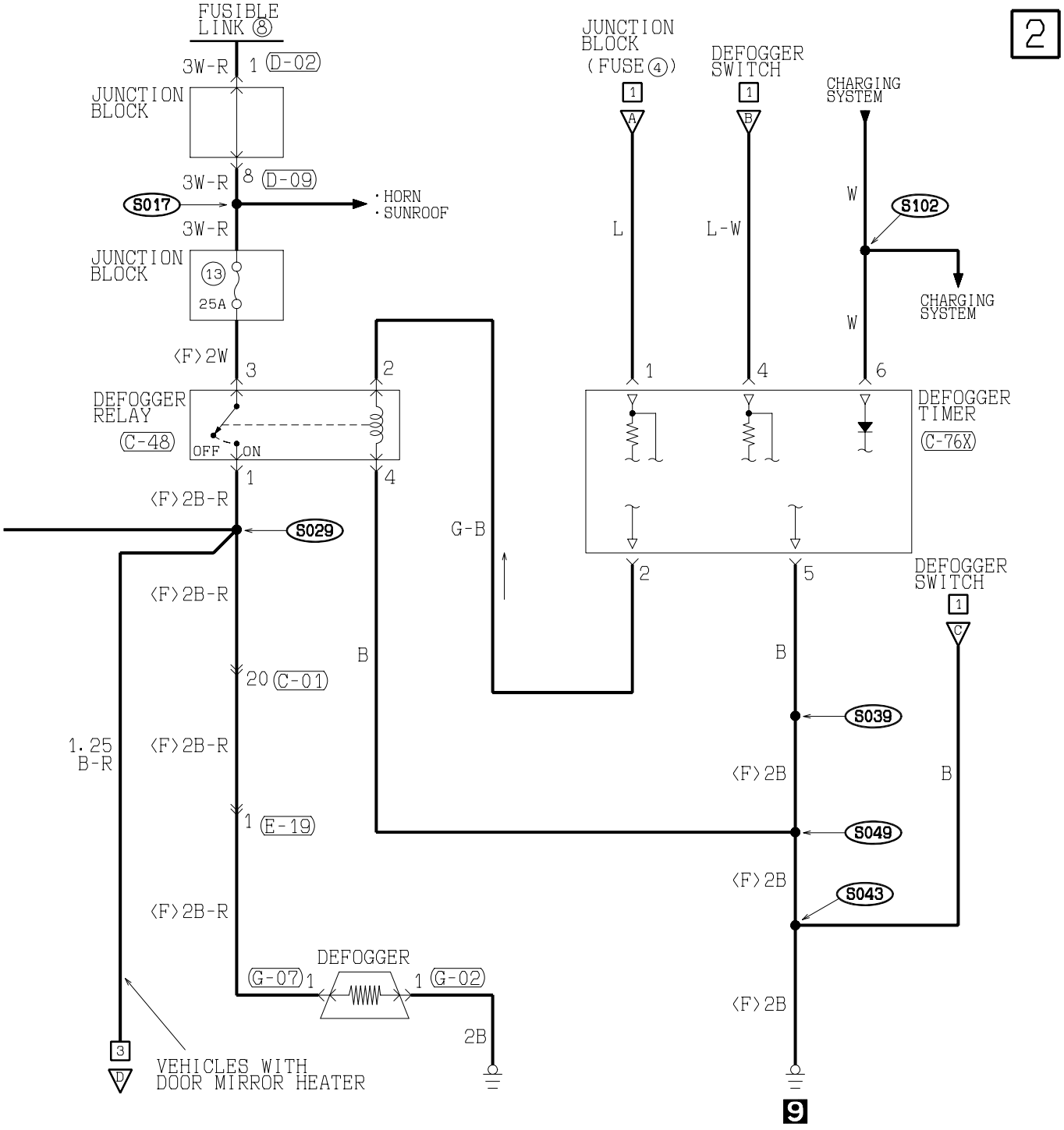

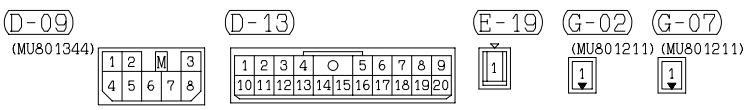

WIRE COLOR CODE

B :BLACK	BR:BROWN	G :GREEN	GR:GRAY	L :BLUE	LG:LIGHT GREEN	O :ORANGE
P :PINK	R :RED	SB:SKY BLUE	V :VIOLET	W :WHITE	Y :YELLOW	

H3P13M02AB

TSB Revision

REAR WINDOW DEFOGGER AND DOOR MIRROR HEATER (CONTINUED)

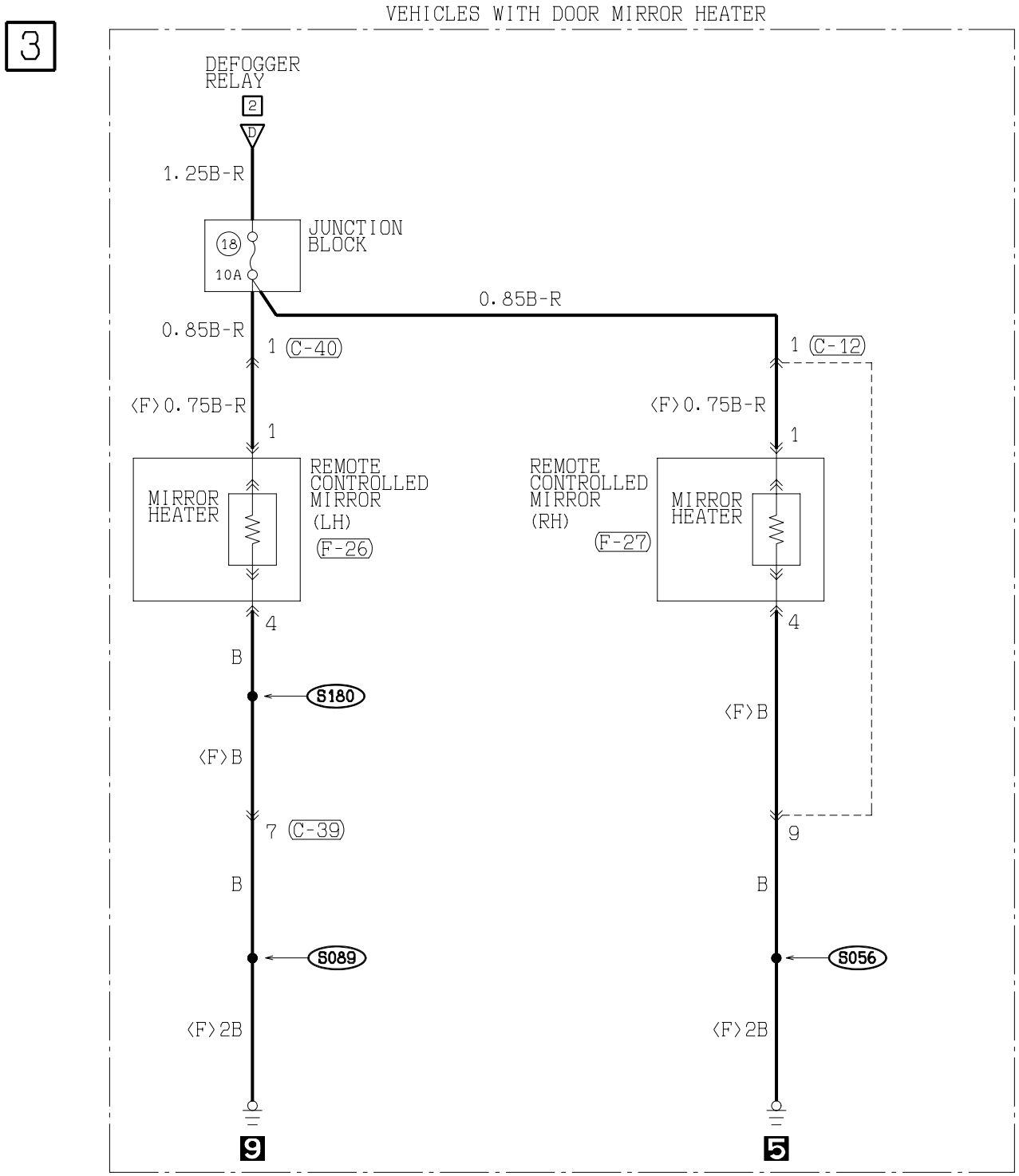

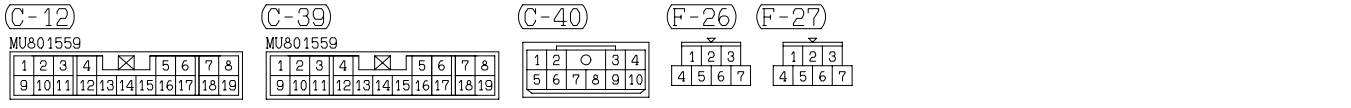

WIRE COLOR CODE

B :BLACK	BR:BROWN	G :GREEN	GR:GRAY	L :BLUE	LG:LIGHT GREEN	O :ORANGE
P :PINK	R :RED	SB:SKY BLUE	V :VIOLET	W :WHITE	Y :YELLOW	

H3P13M02BA

TSB Revision

REMOTE CONTROLLED MIRROR

M1901006500454

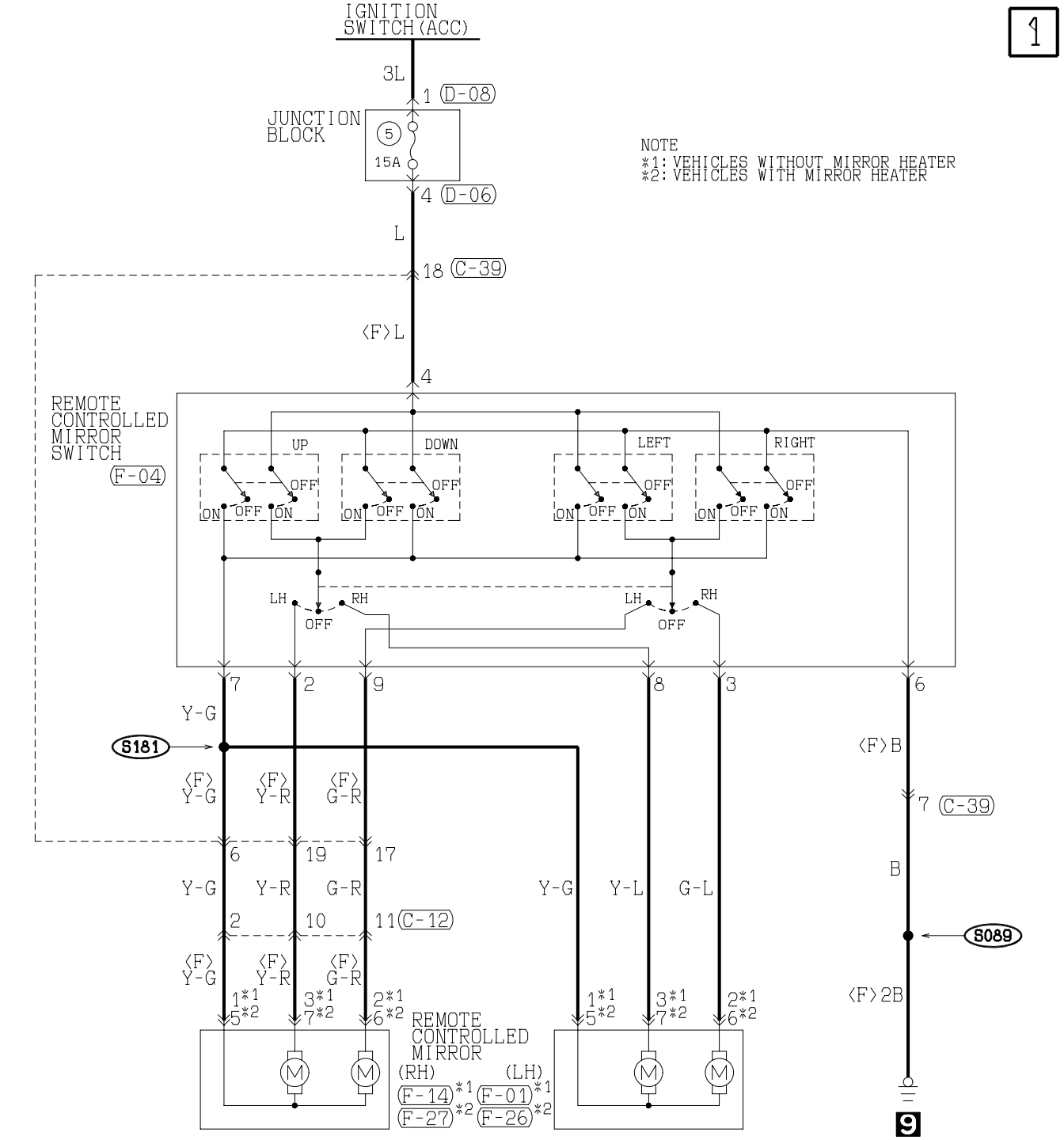

C-12 MU801559 | C-39 MU801559 | D-06 | D-08 (MU801342) | F-01 | F-04 | F-14 | F-26 | F-27

WIRE COLOR CODE

B :BLACK	BR:BROWN	G :GREEN	GR:GRAY	L :BLUE	LG:LIGHT GREEN	O :ORANGE	
P :PINK	R :RED	SB:SKY BLUE	V :VIOLET	W :WHITE	Y :YELLOW		

H3P13M03AA

TSB Revision

AUTO-DIMMING MIRROR

M1901006800154

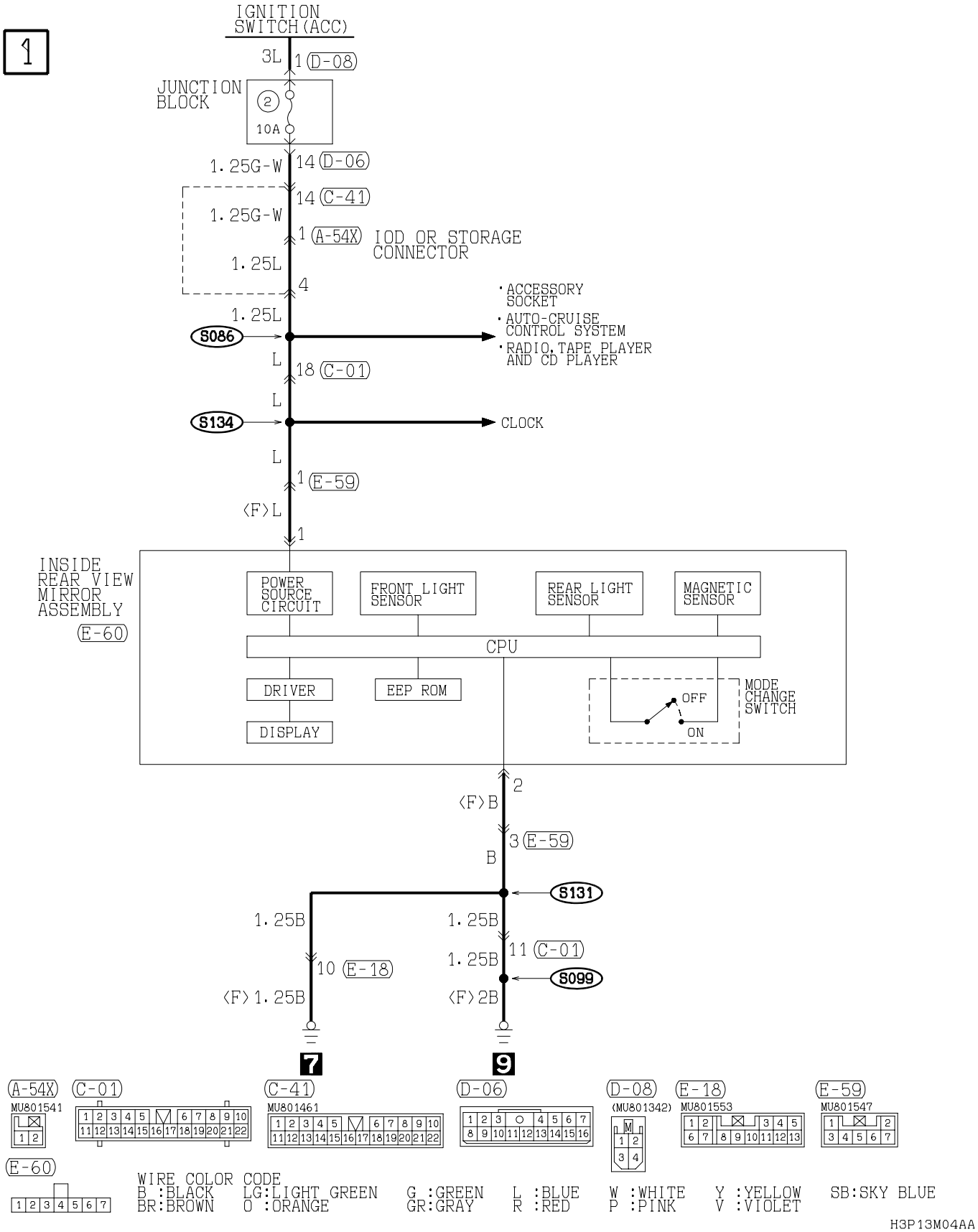

TSB Revision

NOTES

RADIO, TAPE PLAYER AND CD PLAYER <VEHICLES WITHOUT AMPLIFIER>

M1901007200315

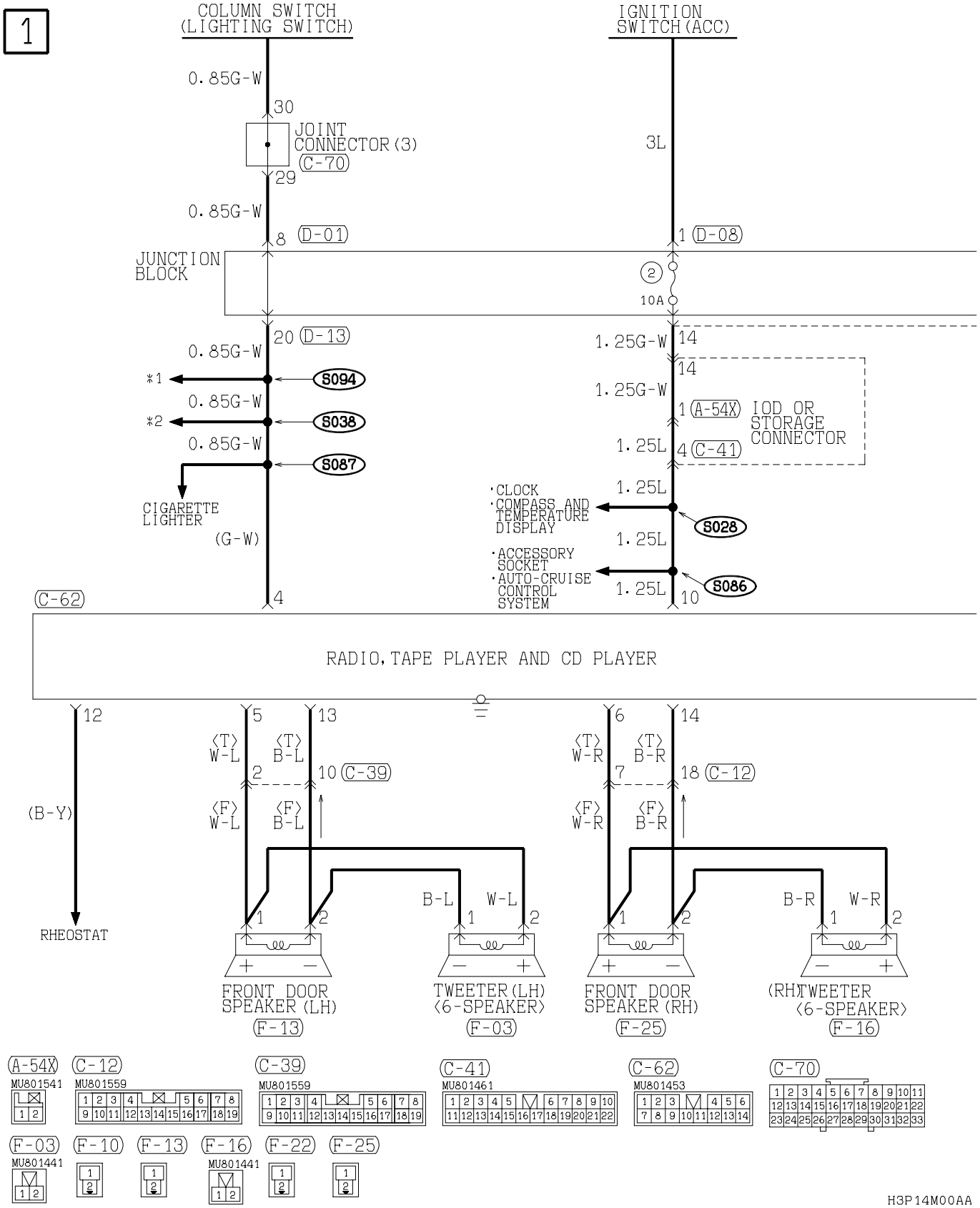

H3P14M00AA

TSB Revision

2

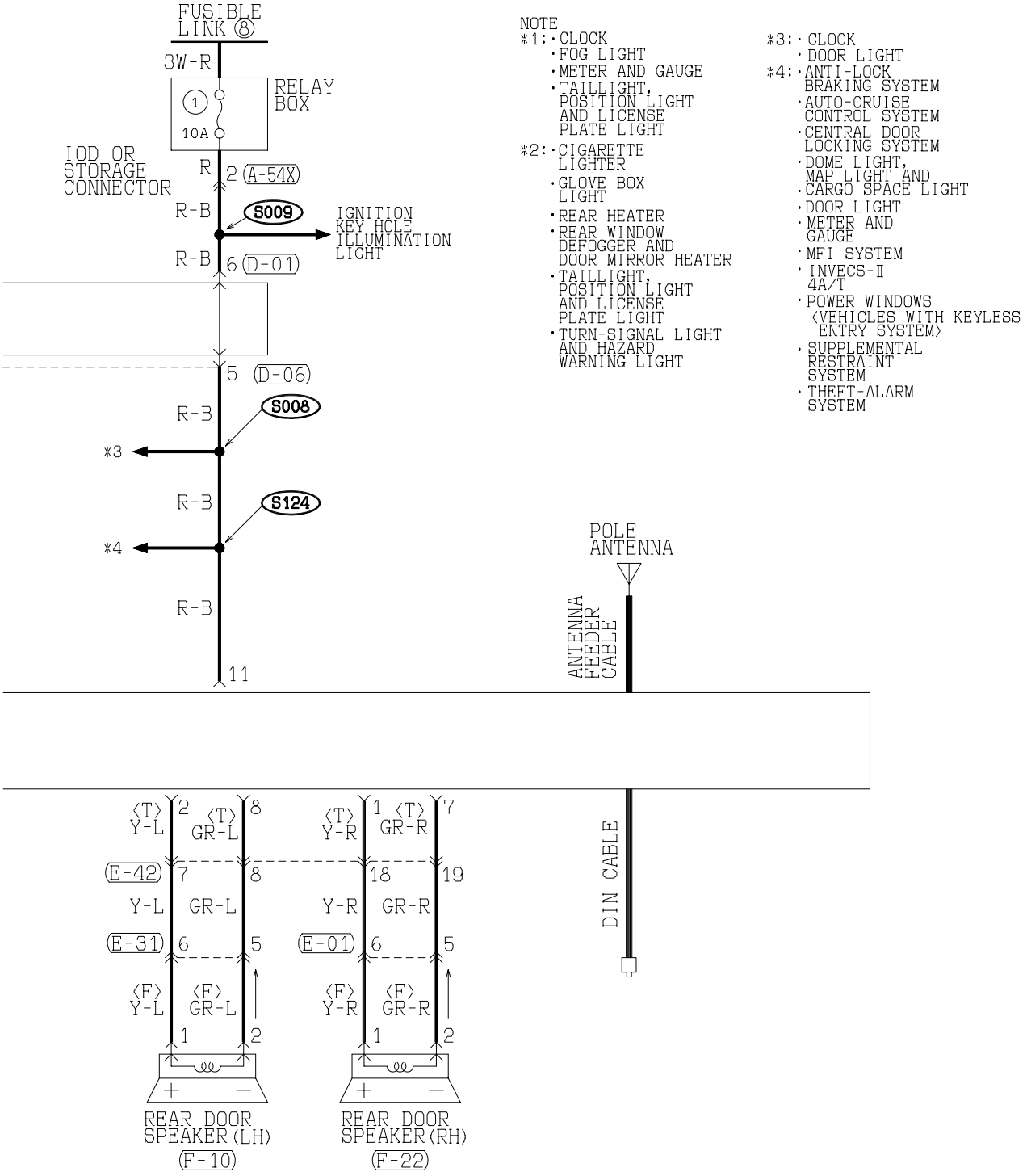

NOTE
*1: ·CLOCK
·FOG LIGHT
·METER AND GAUGE
·TAILLIGHT, POSITION LIGHT AND LICENSE PLATE LIGHT

*2: ·CIGARETTE LIGHTER
·GLOVE BOX LIGHT
·REAR HEATER
·REAR WINDOW DEFOGGER AND DOOR MIRROR HEATER
·TAILLIGHT, POSITION LIGHT AND LICENSE PLATE LIGHT
·TURN-SIGNAL LIGHT AND HAZARD WARNING LIGHT

*3: ·CLOCK
·DOOR LIGHT

*4: ·ANTI-LOCK BRAKING SYSTEM
·AUTO-CRUISE CONTROL SYSTEM
·CENTRAL DOOR LOCKING SYSTEM
·DOME LIGHT, MAP LIGHT AND CARGO SPACE LIGHT
·DOOR LIGHT
·METER AND GAUGE
·MFI SYSTEM
·INVECS-Ⅱ 4A/T
·POWER WINDOWS ⟨VEHICLES WITH KEYLESS ENTRY SYSTEM⟩
·SUPPLEMENTAL RESTRAINT SYSTEM
·THEFT-ALARM SYSTEM

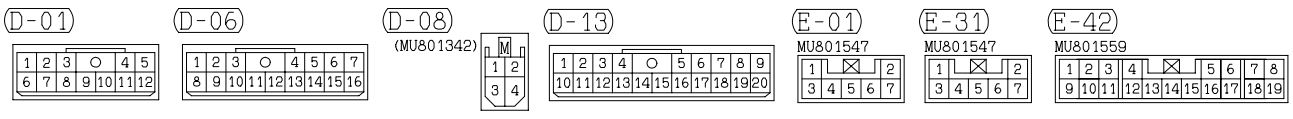

WIRE COLOR CODE

B :BLACK	BR:BROWN	G :GREEN	GR:GRAY	L :BLUE	LG:LIGHT GREEN	O :ORANGE	
P :PINK	R :RED	SB:SKY BLUE	V :VIOLET	W :WHITE	Y :YELLOW		

H3P14M00AB

TSB Revision

RADIO, TAPE PLAYER AND CD PLAYER <VEHICLES WITH AMPLIFIER>

M1901007200326

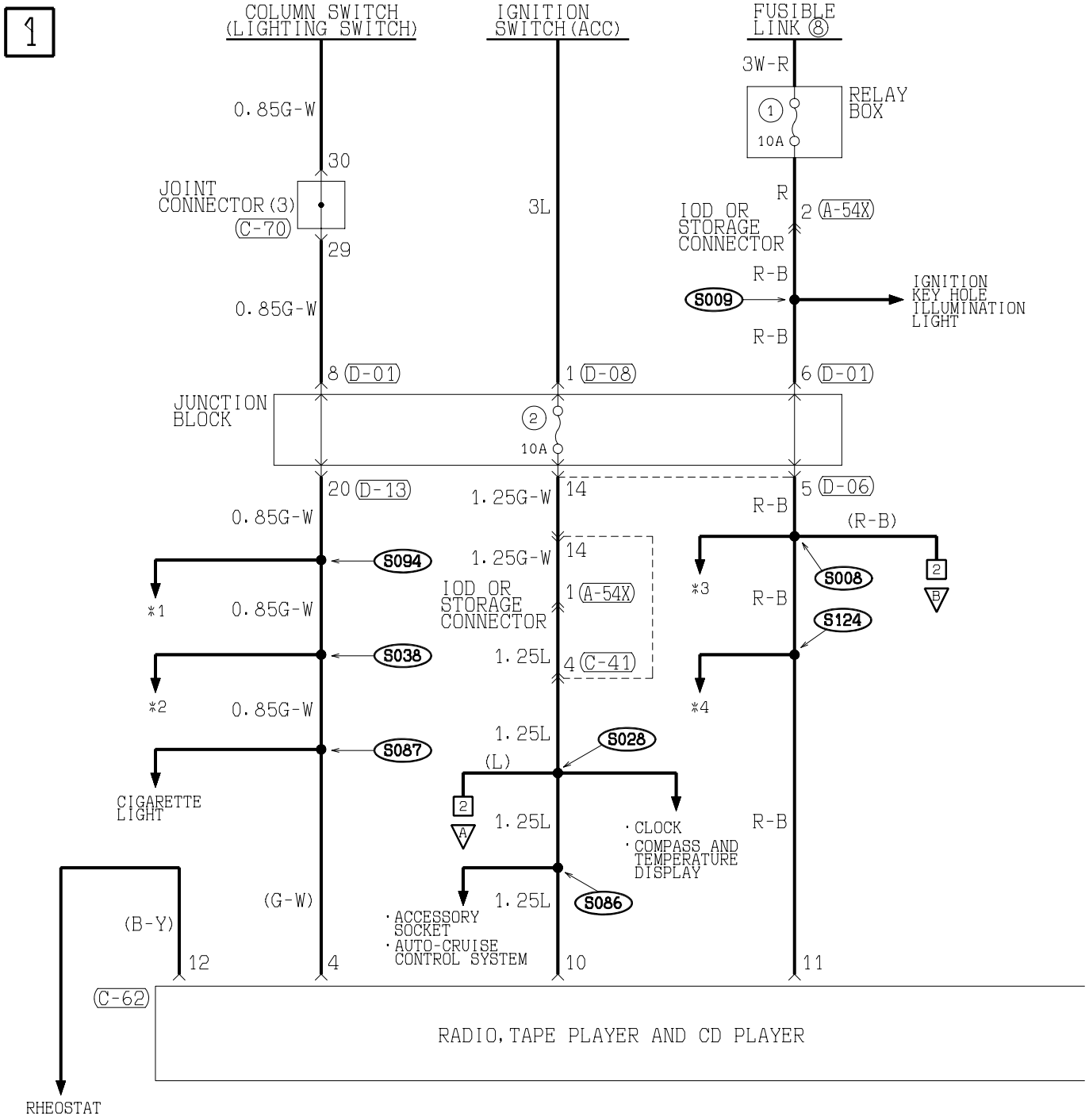

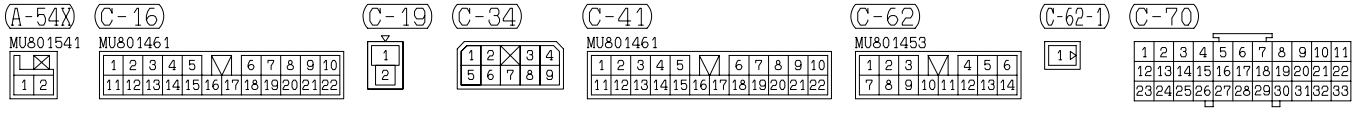

H3P14M01AA

TSB Revision

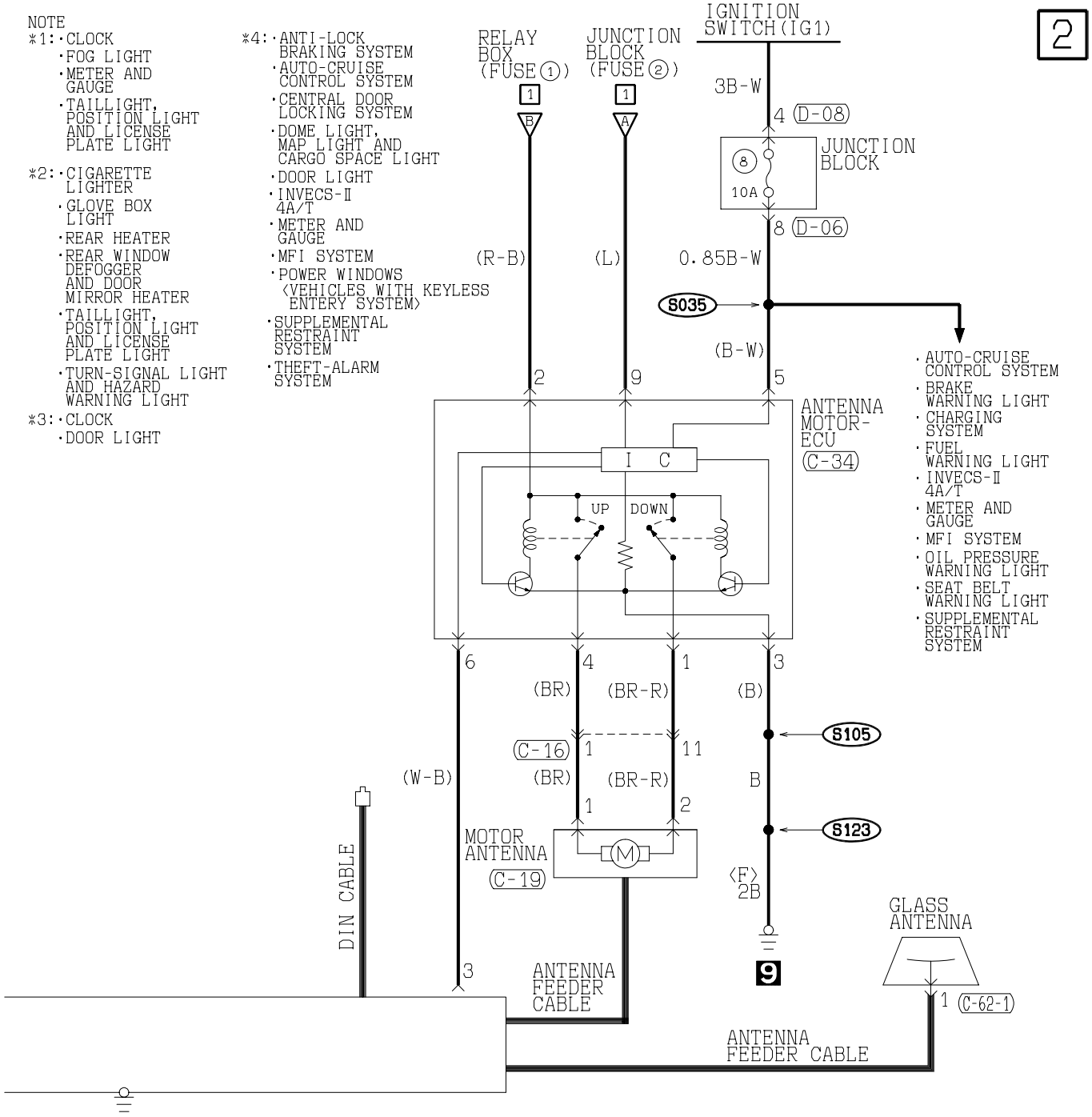

WIRE COLOR CODE

B :BLACK	BR:BROWN	G :GREEN	GR:GRAY	L :BLUE	LG:LIGHT GREEN	O :ORANGE
P :PINK	R :RED	SB:SKY BLUE	V :VIOLET	W :WHITE	Y :YELLOW	

H3P14M01AB

TSB Revision

RADIO, TAPE PLAYER AND CD PLAYER <VEHICLES WITH AMPLIFIER> (CONTINUED)

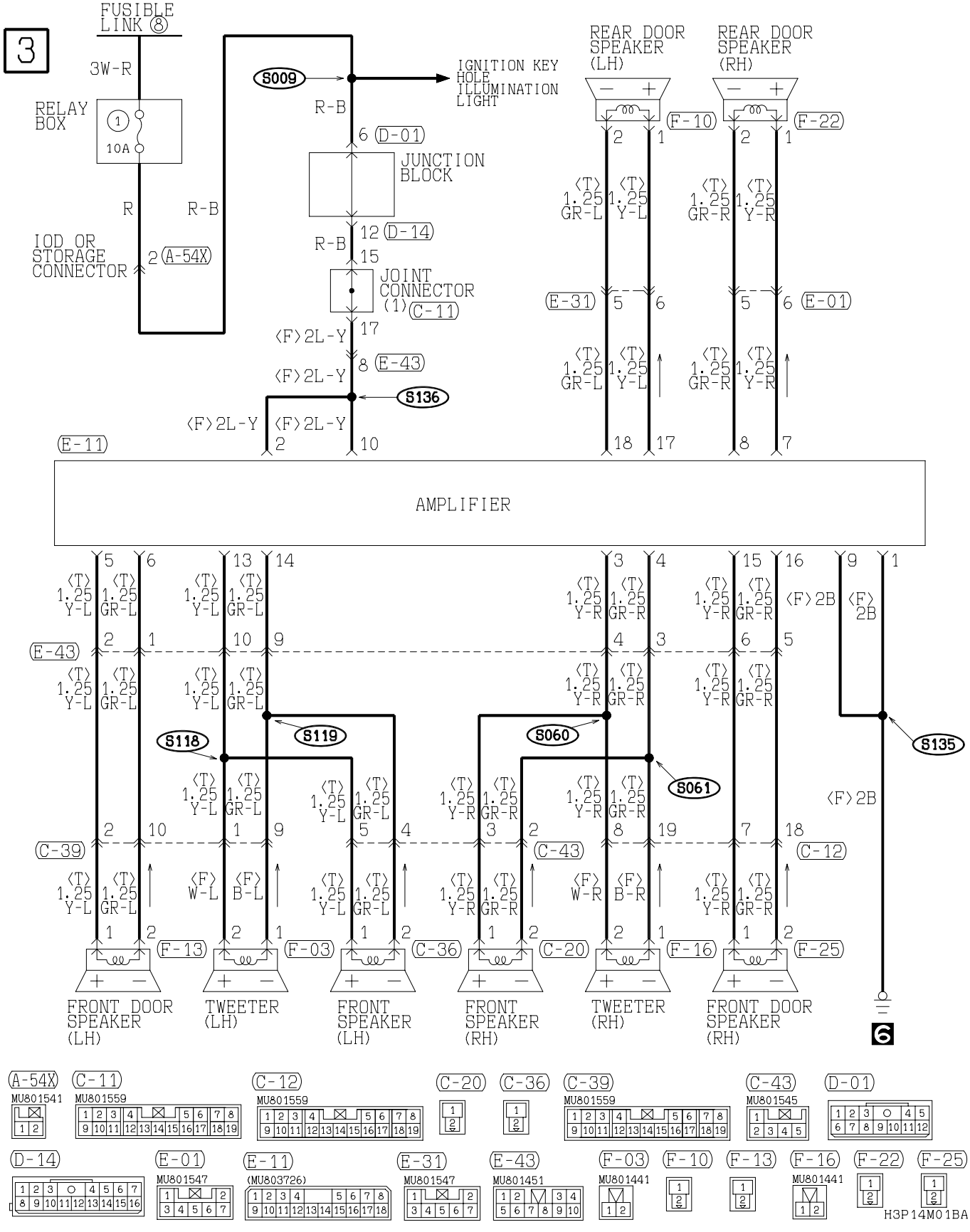

TSB Revision

CLOCK

M1901007700235

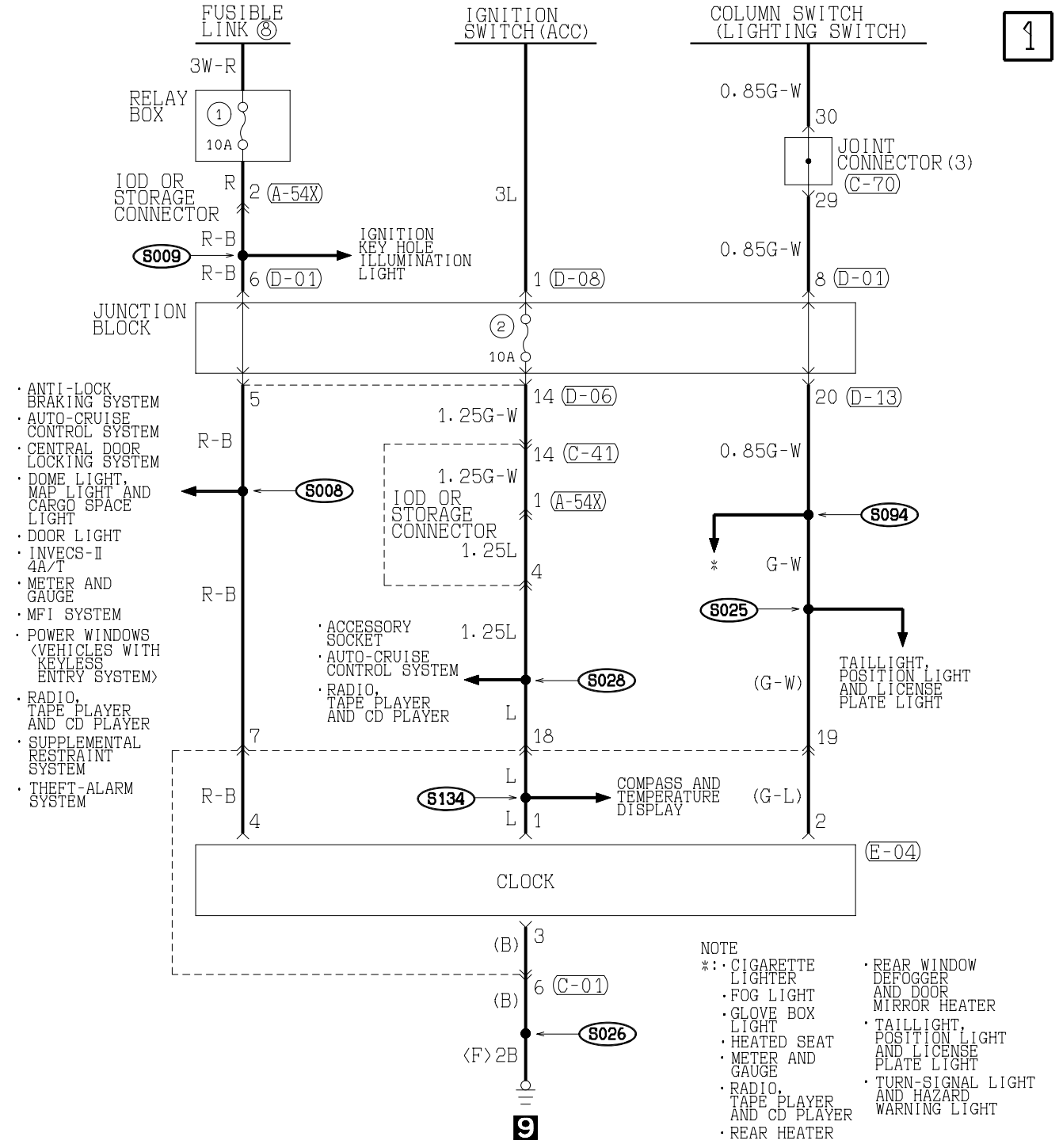

TSB Revision

CIGARETTE LIGHTER

M1901007800373

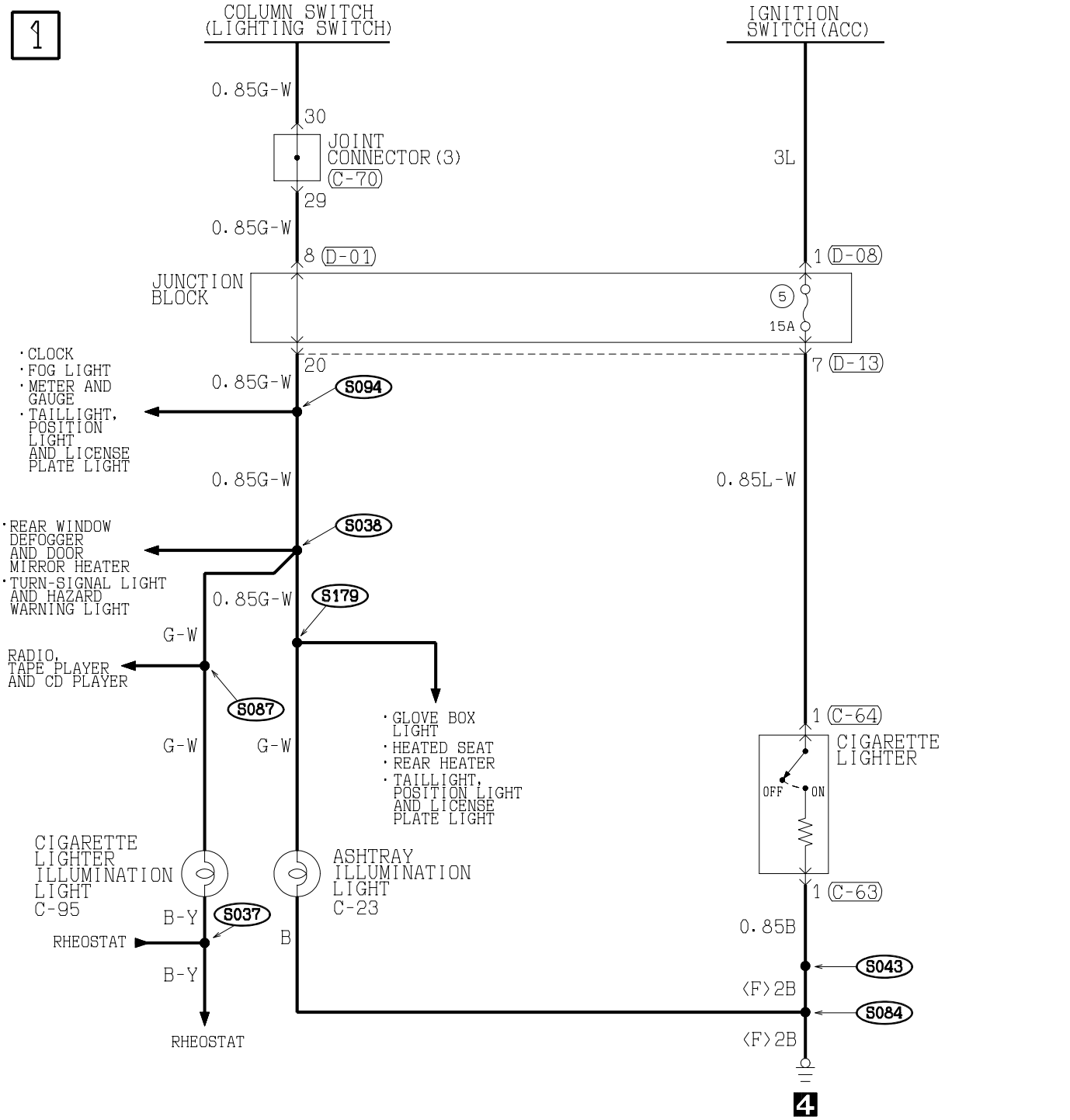

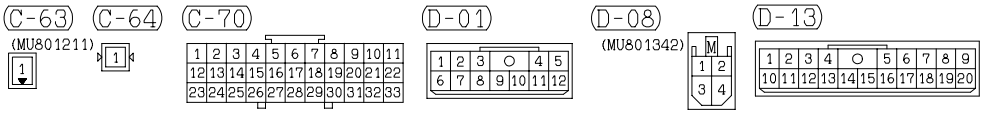

WIRE COLOR CODE

B :BLACK	BR:BROWN	G :GREEN	GR:GRAY	L :BLUE	LG:LIGHT GREEN	O :ORANGE	
P :PINK	R :RED	SB:SKY BLUE	V :VIOLET	W :WHITE	Y :YELLOW		

H3P14M03AA

TSB Revision

ACCESSORY SOCKET

M1901007900369

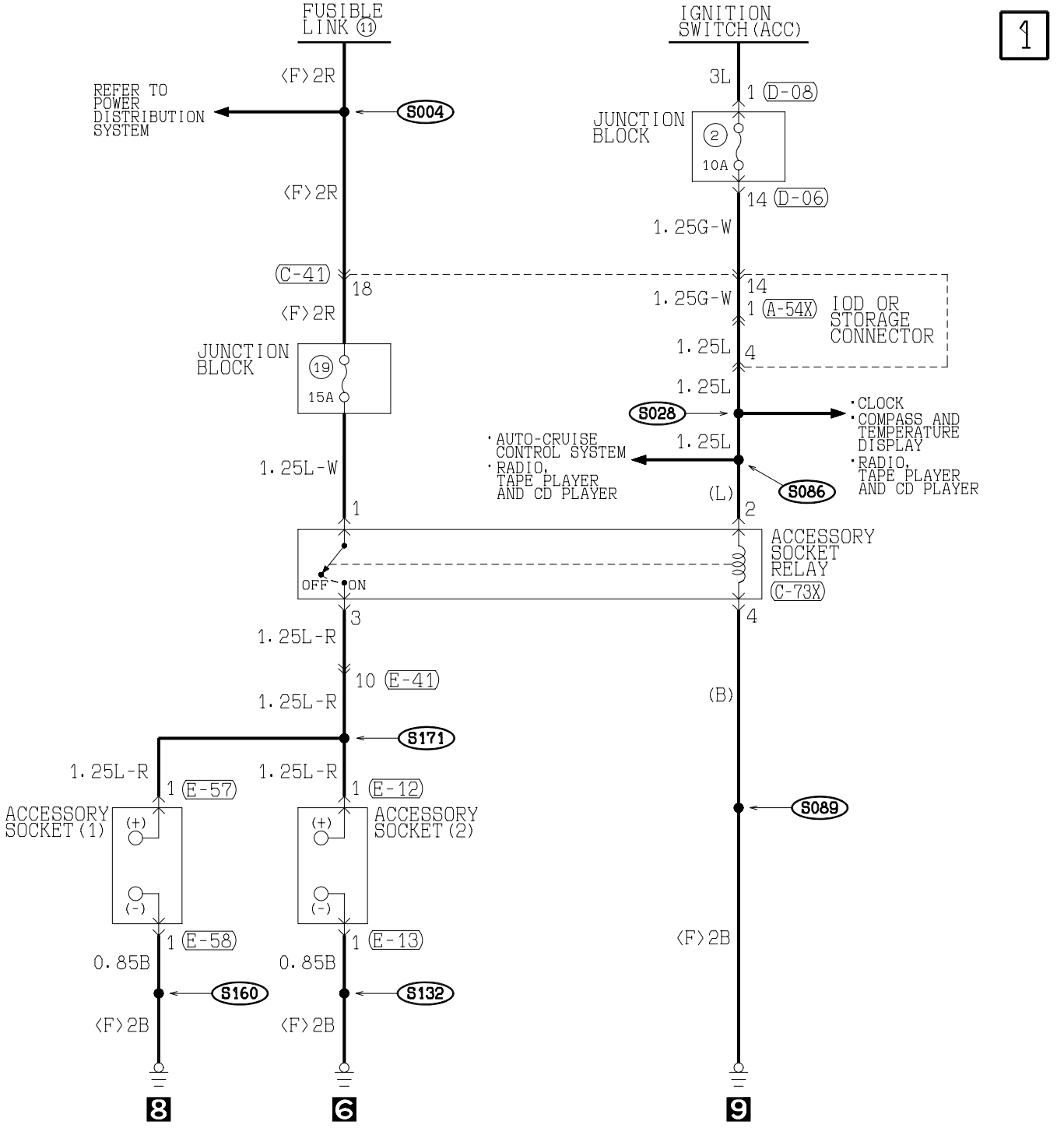

TSB Revision

SUNROOF

M1901009900387

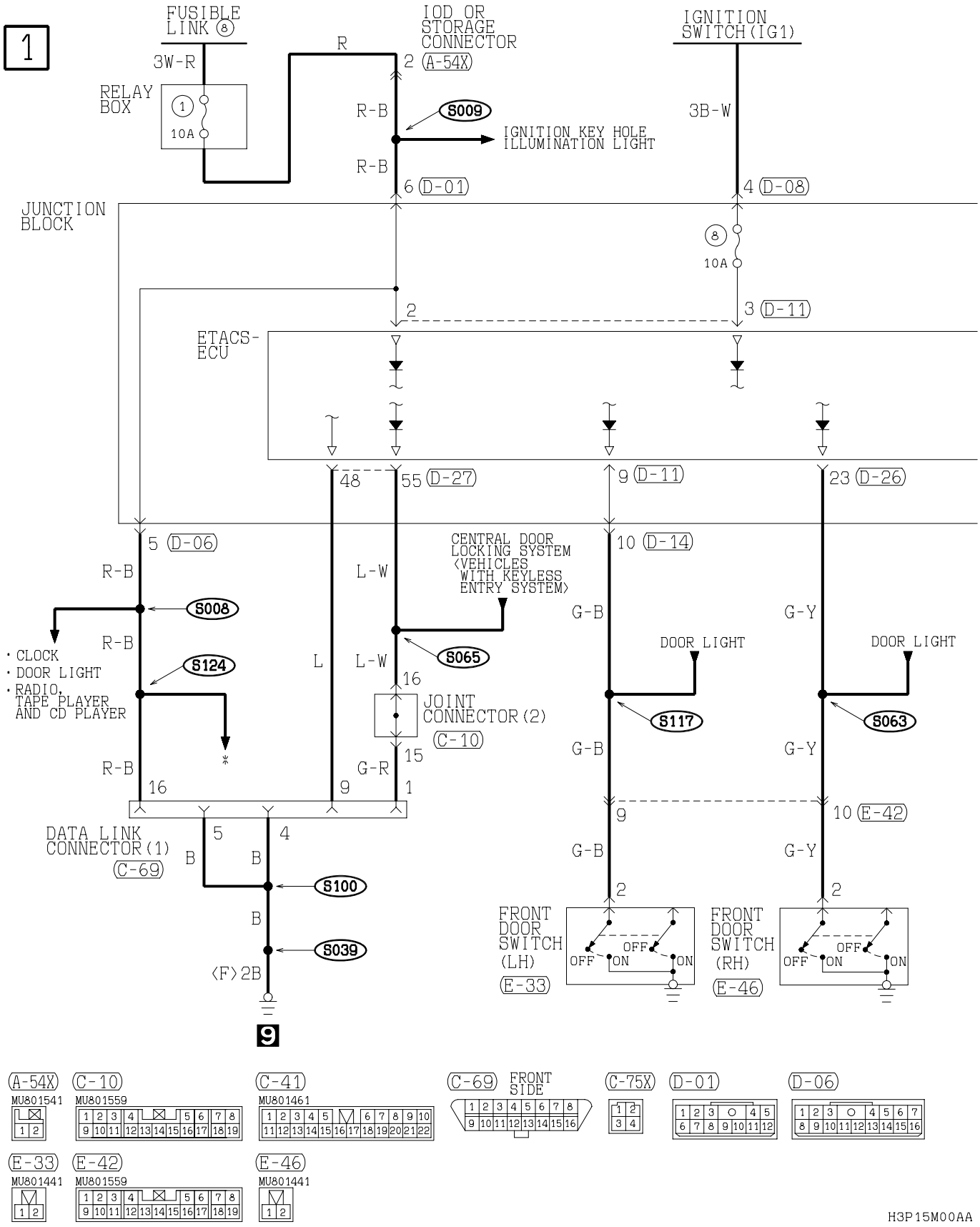

TSB Revision

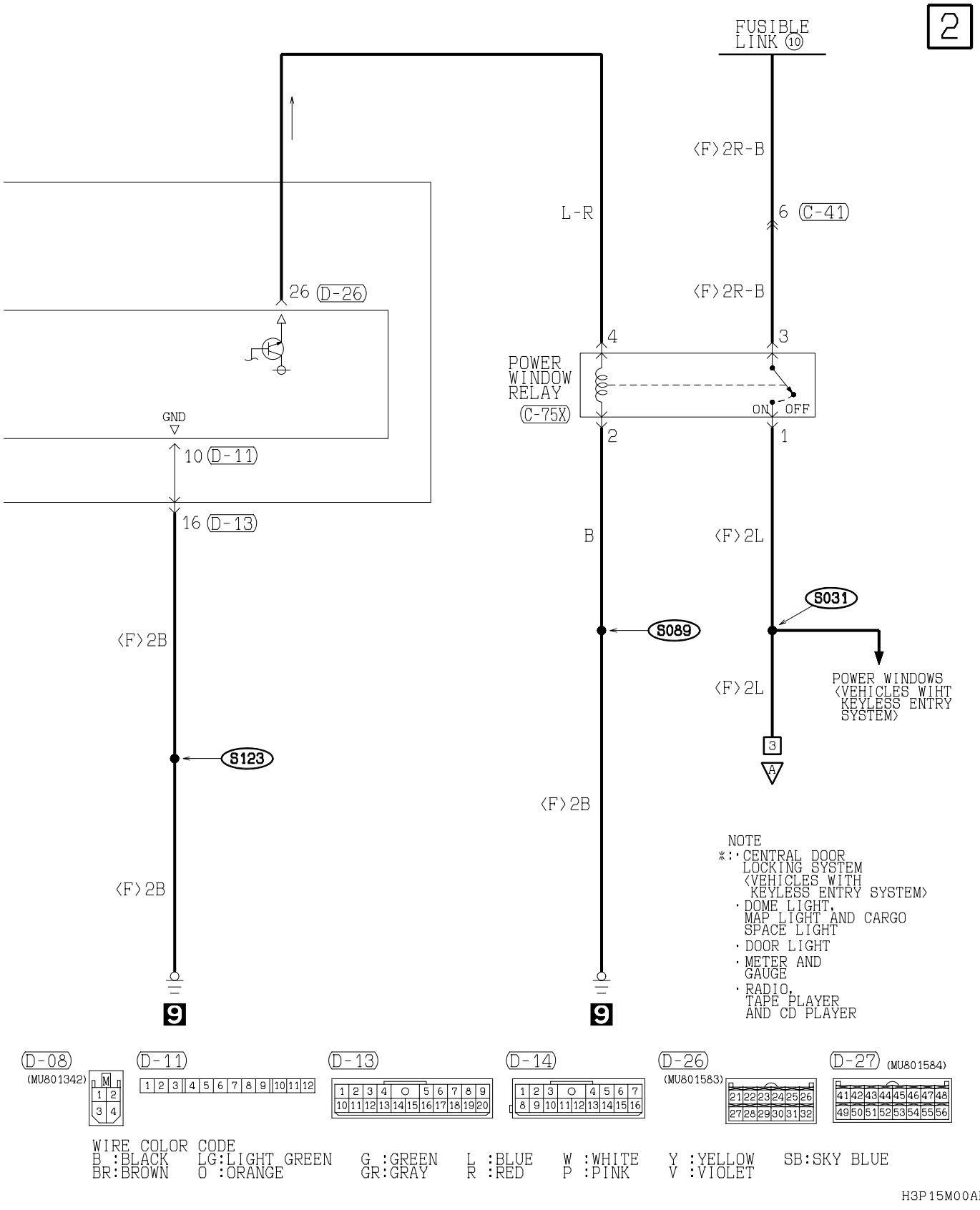

TSB Revision

SUNROOF <CONTINUED>

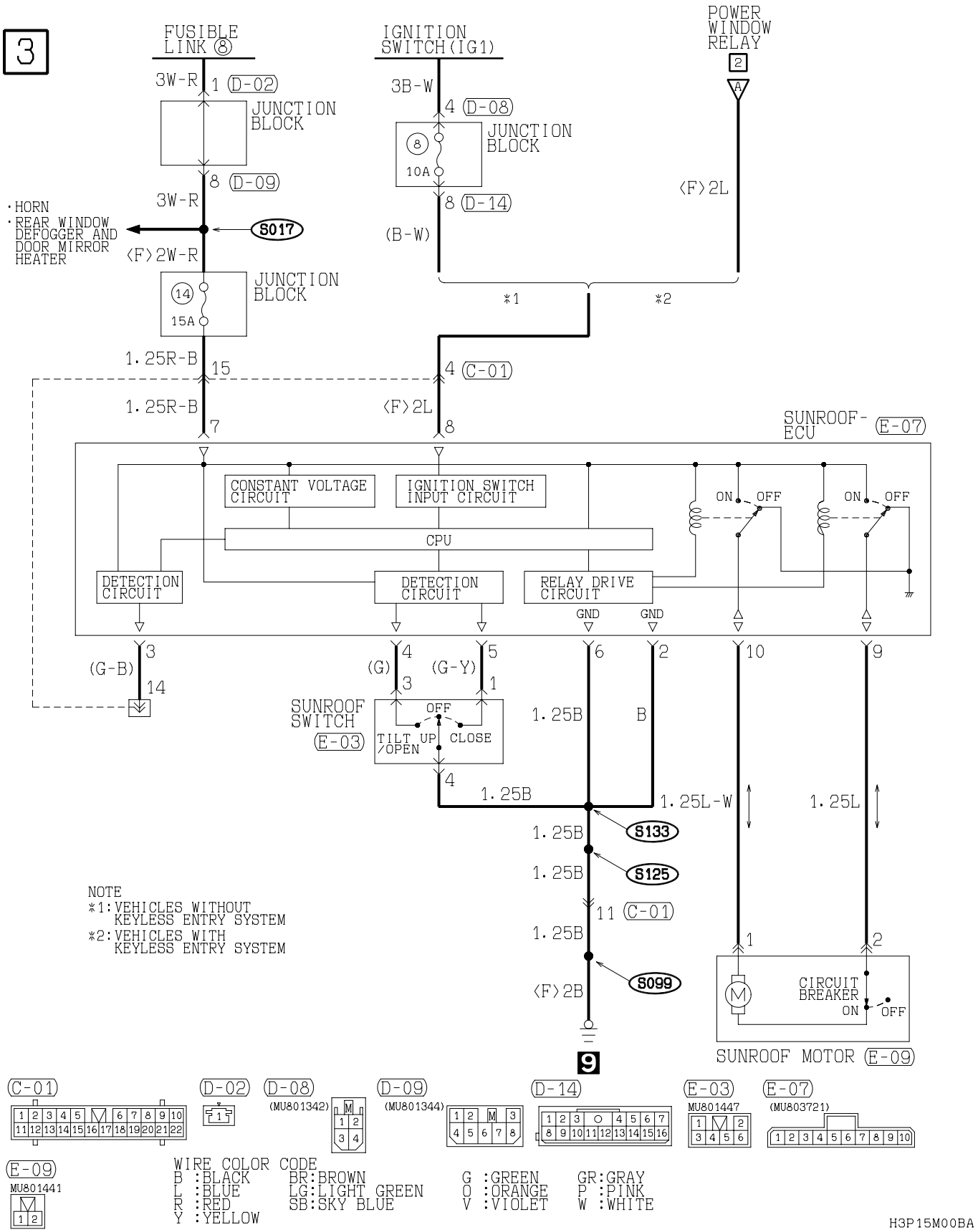

TSB Revision

NOTES

LIGHTING MONITOR TONE ALARM

M1901011400345

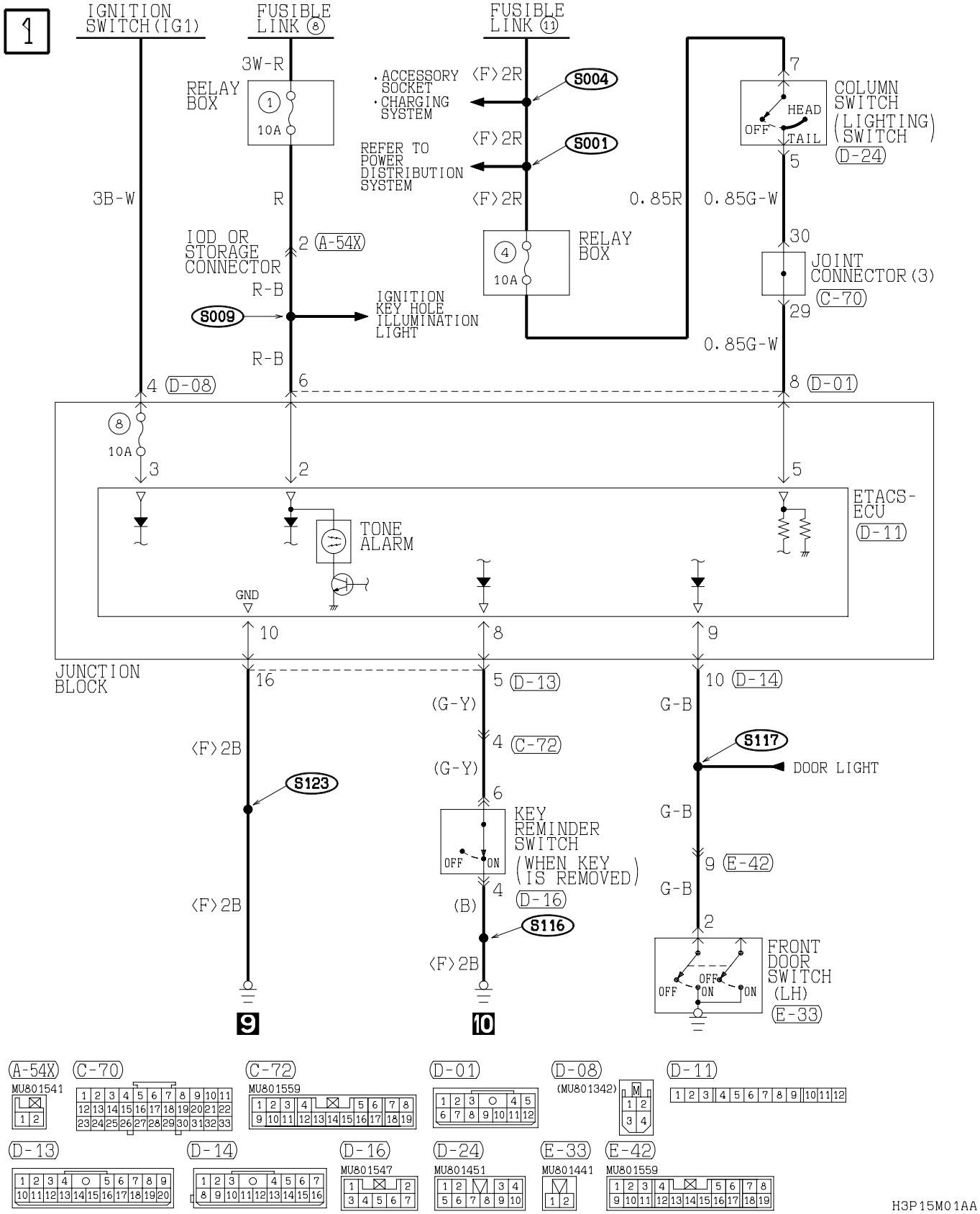

TSB Revision

KEY REMINDER TONE ALARM

M1901011300359

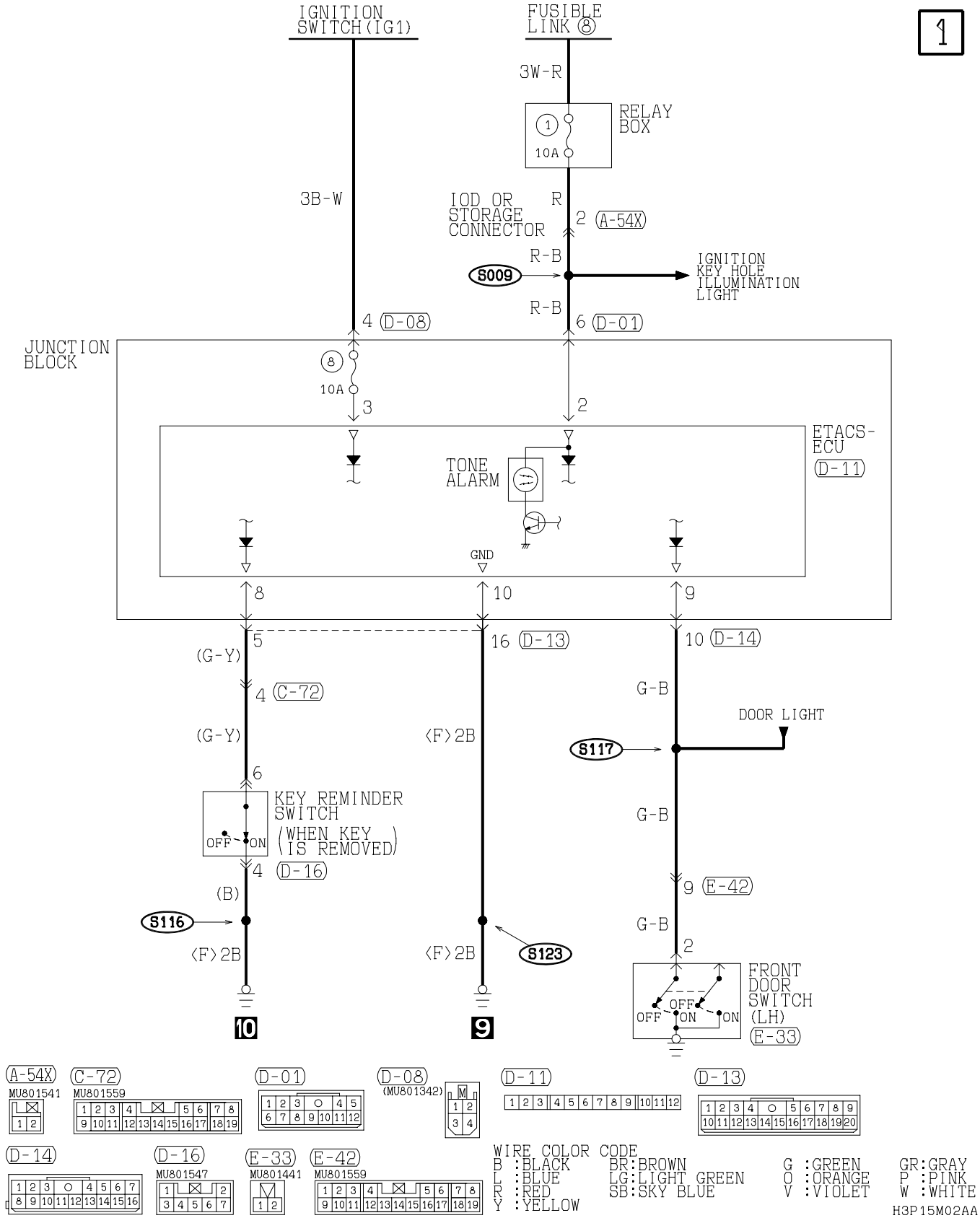

TSB Revision

SEAT BELT TONE ALARM

M1901011200415

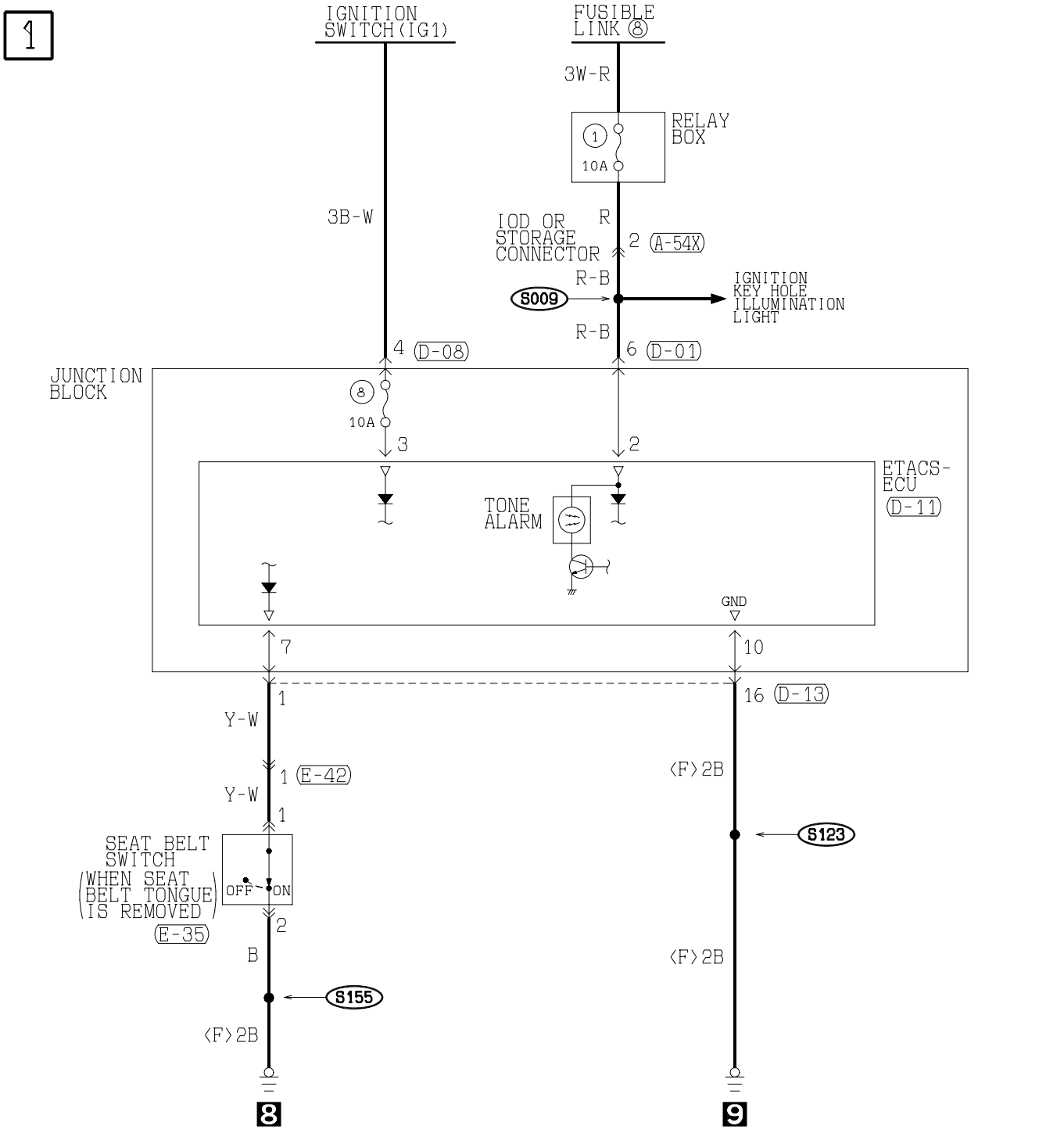

WIRE COLOR CODE

B :BLACK	BR:BROWN	G :GREEN	GR:GRAY	L :BLUE	LG:LIGHT GREEN	O :ORANGE
P :PINK	R :RED	SB:SKY BLUE	V :VIOLET	W :WHITE	Y :YELLOW	

H3P15M03AA

TSB Revision

RHEOSTAT

M1901011100429

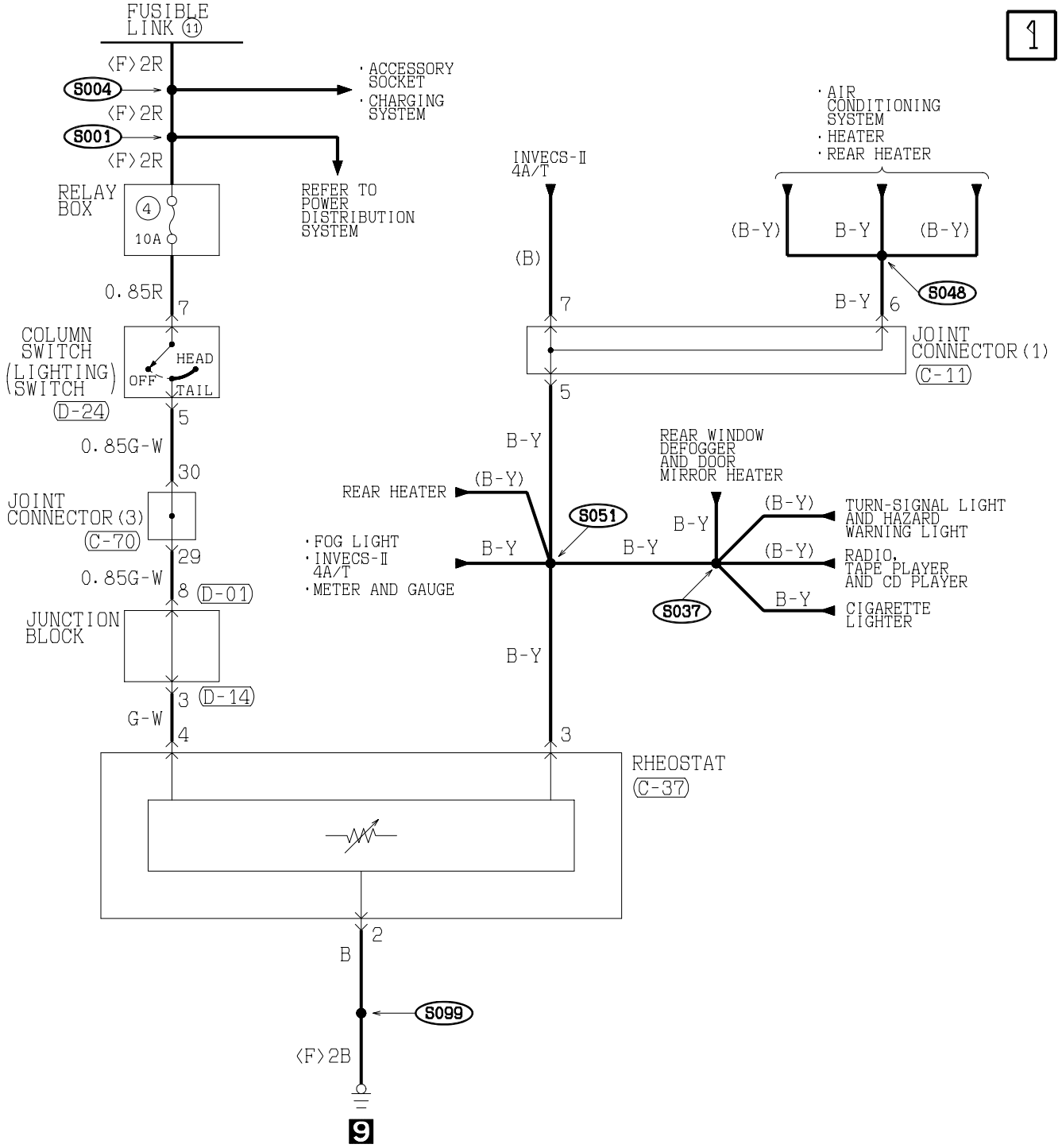

WIRE COLOR CODE

B :BLACK	BR:BROWN	G :GREEN	GR:GRAY	L :BLUE	LG:LIGHT GREEN	O :ORANGE	
P :PINK	R :RED	SB:SKY BLUE	V :VIOLET	W :WHITE	Y :YELLOW		

H3P15M04AA

TSB Revision

AUTO-CRUISE CONTROL SYSTEM

M1901009300879

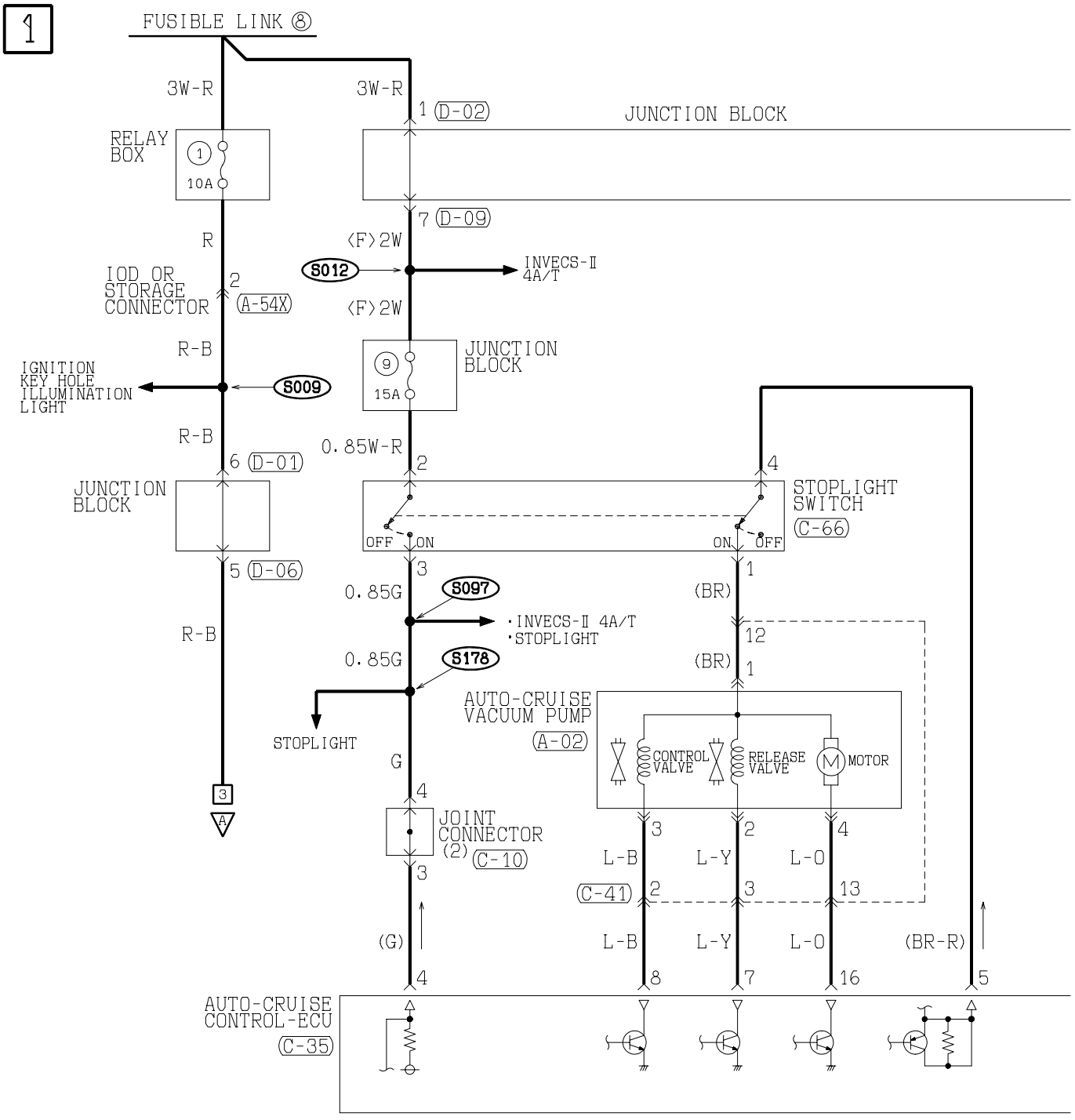

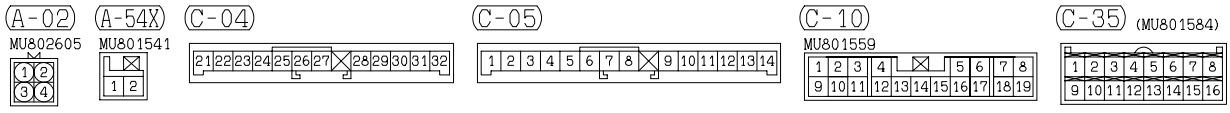

H3P15M05AA

TSB Revision

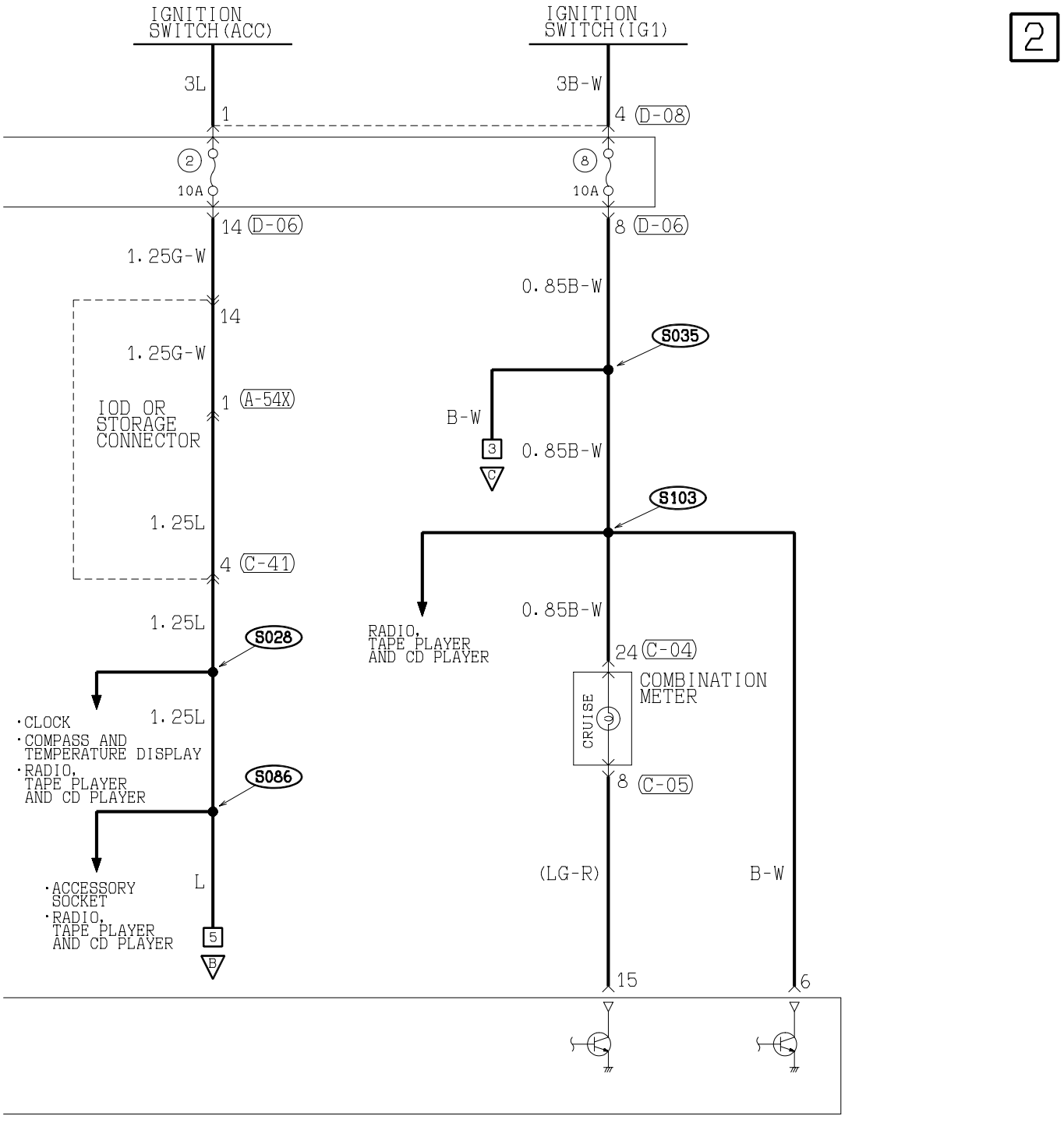

H3P15M05AB

TSB Revision

AUTO-CRUISE CONTROL SYSTEM (CONTINUED)

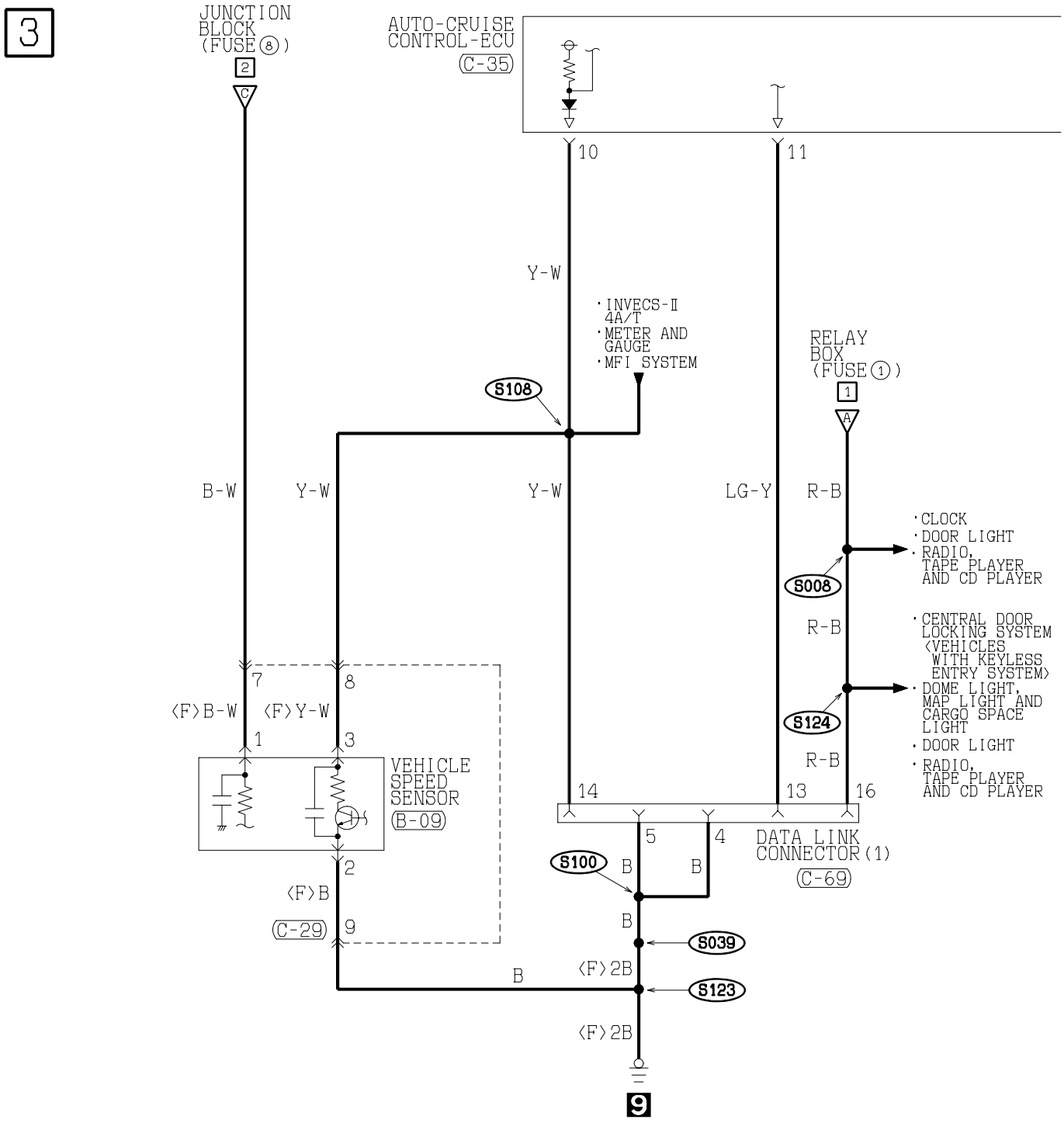

H3P15M05BA

TSB Revision

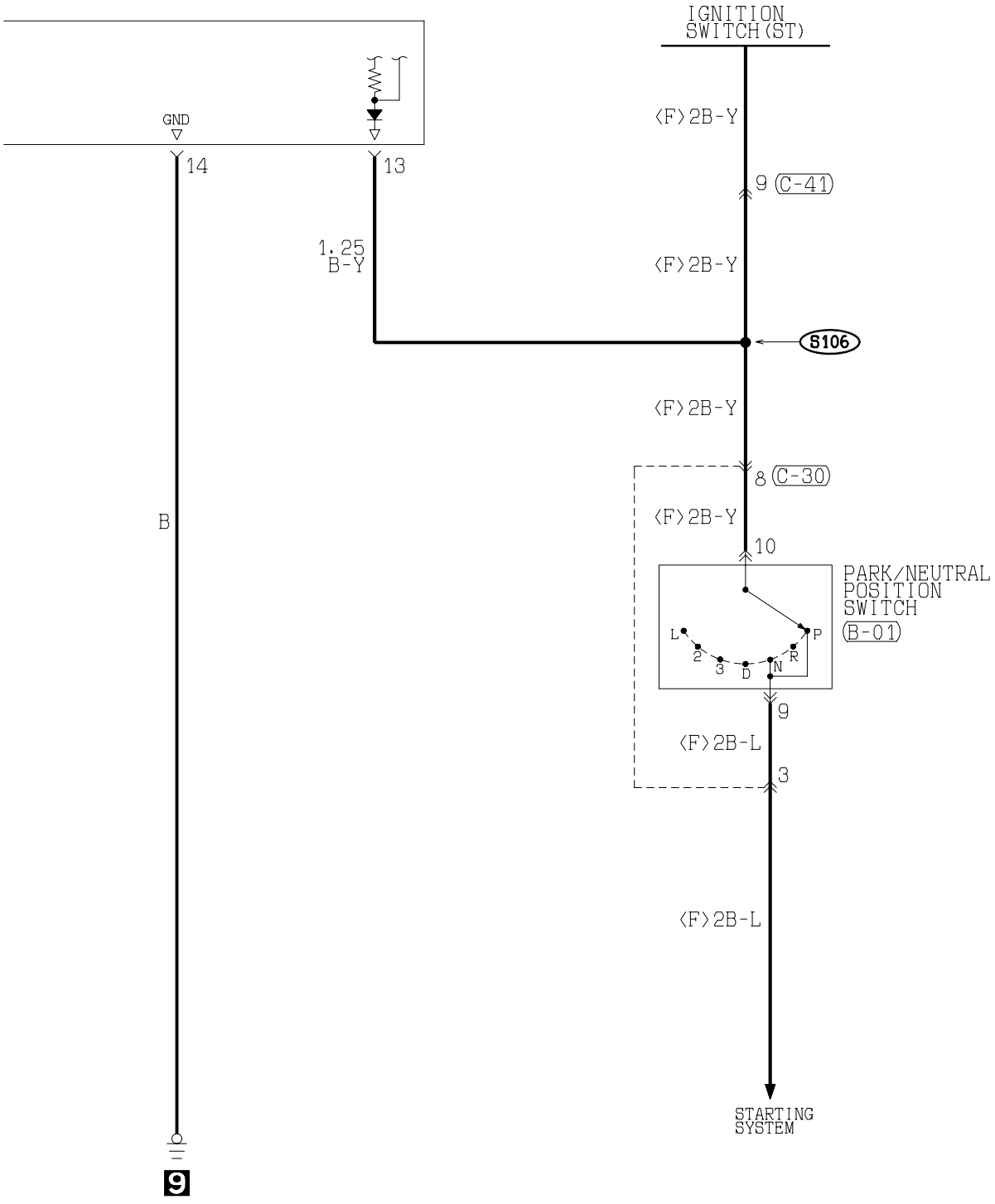

WIRE COLOR CODE

B :BLACK	BR:BROWN	G :GREEN	GR:GRAY	L :BLUE	LG:LIGHT GREEN	O :ORANGE
P :PINK	R :RED	SB:SKY BLUE	V :VIOLET	W :WHITE	Y :YELLOW	

H3P15M05BB

TSB Revision

AUTO-CRUISE CONTROL SYSTEM (CONTINUED)

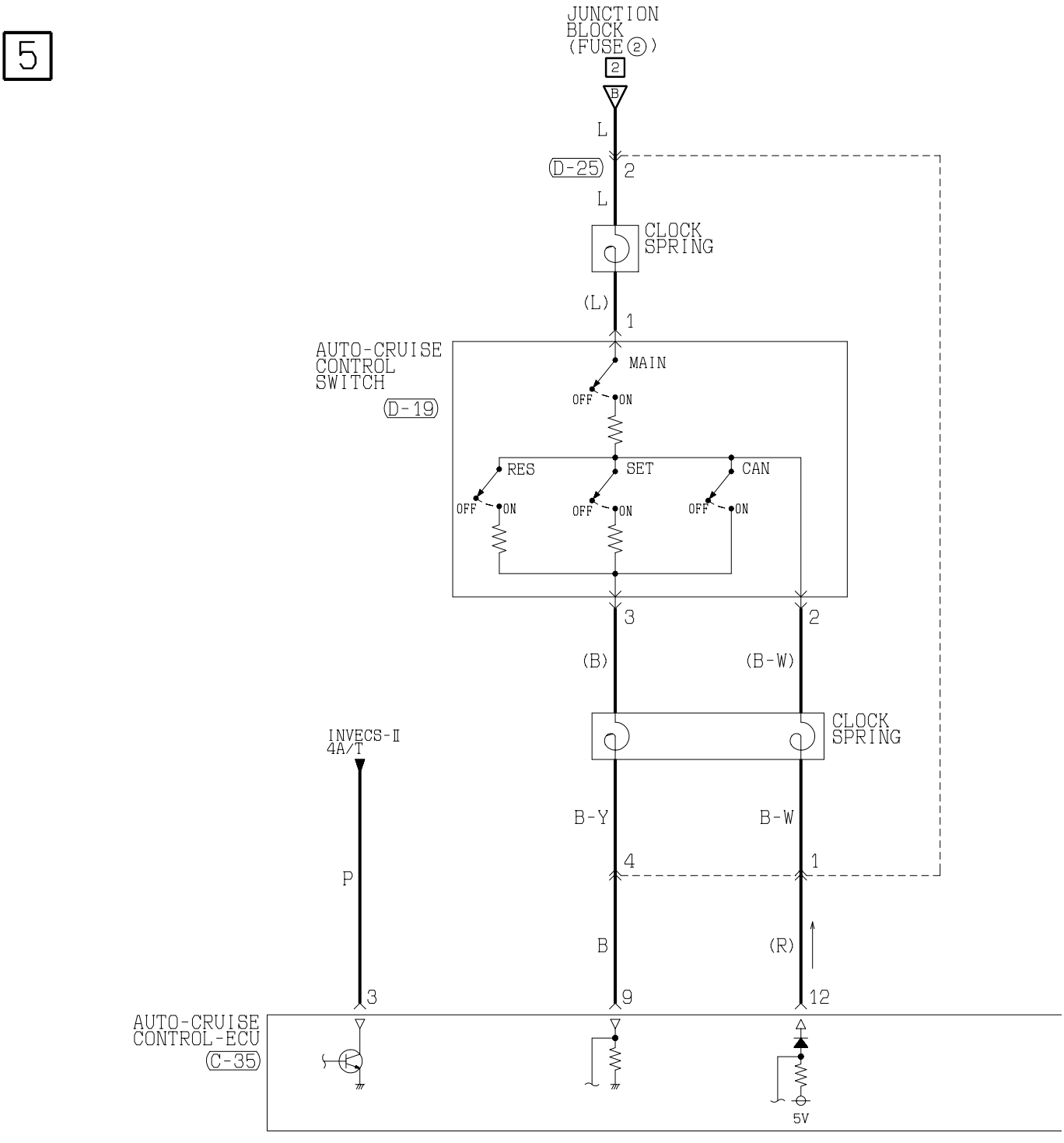

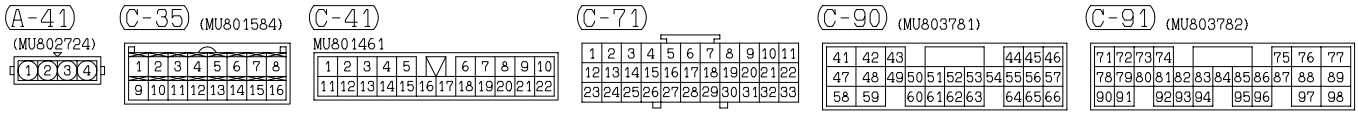

H3P15M05CA

TSB Revision

6

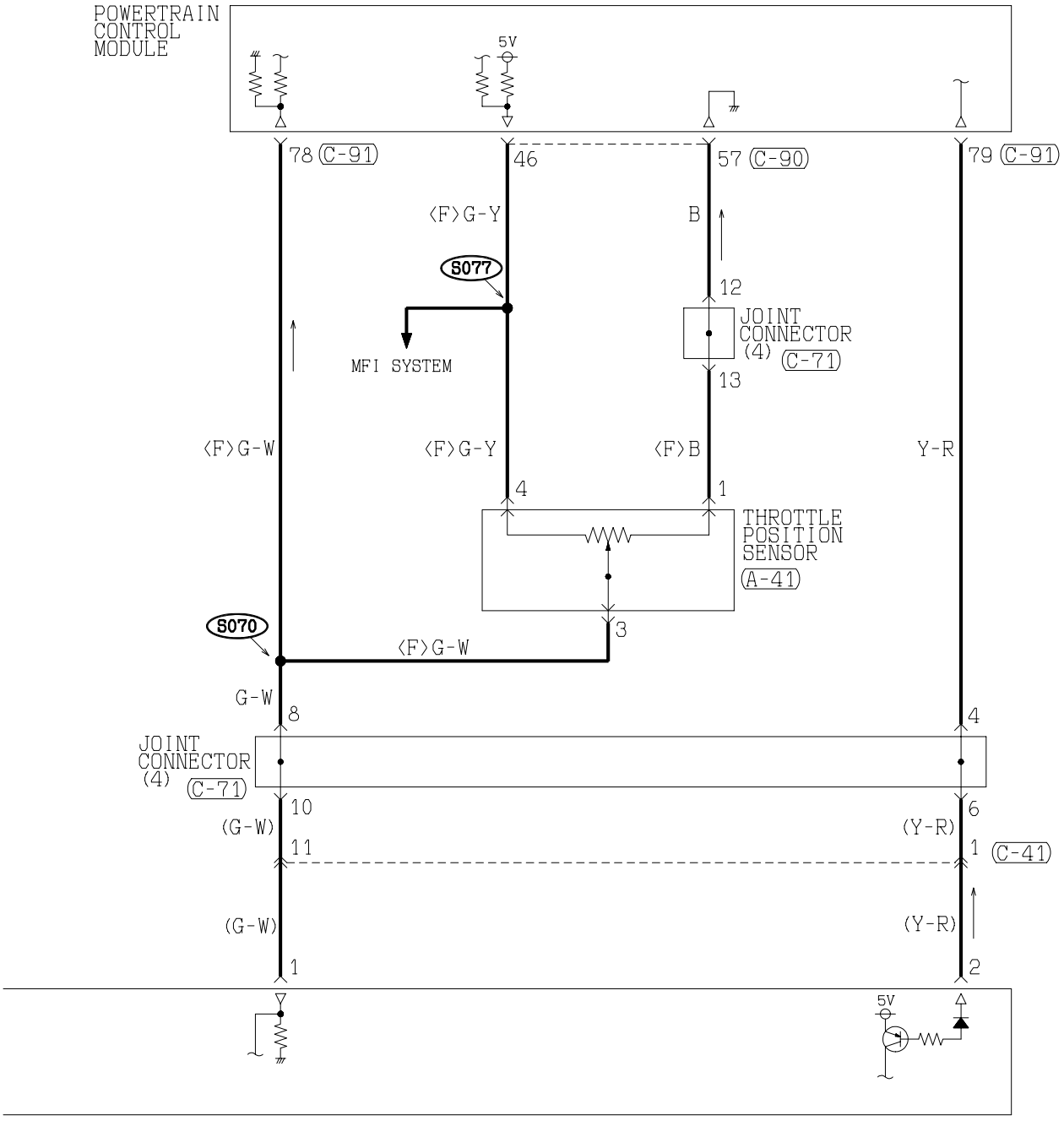

D-19 D-25

MU801446

WIRE COLOR CODE

B :BLACK	BR:BROWN	G :GREEN	GR:GRAY	L :BLUE	LG:LIGHT GREEN	O :ORANGE	
P :PINK	R :RED	SB:SKY BLUE	V :VIOLET	W :WHITE	Y :YELLOW		

H3P15M05CB

TSB Revision

FULL TIME 4WD SYSTEM

M1901017000055

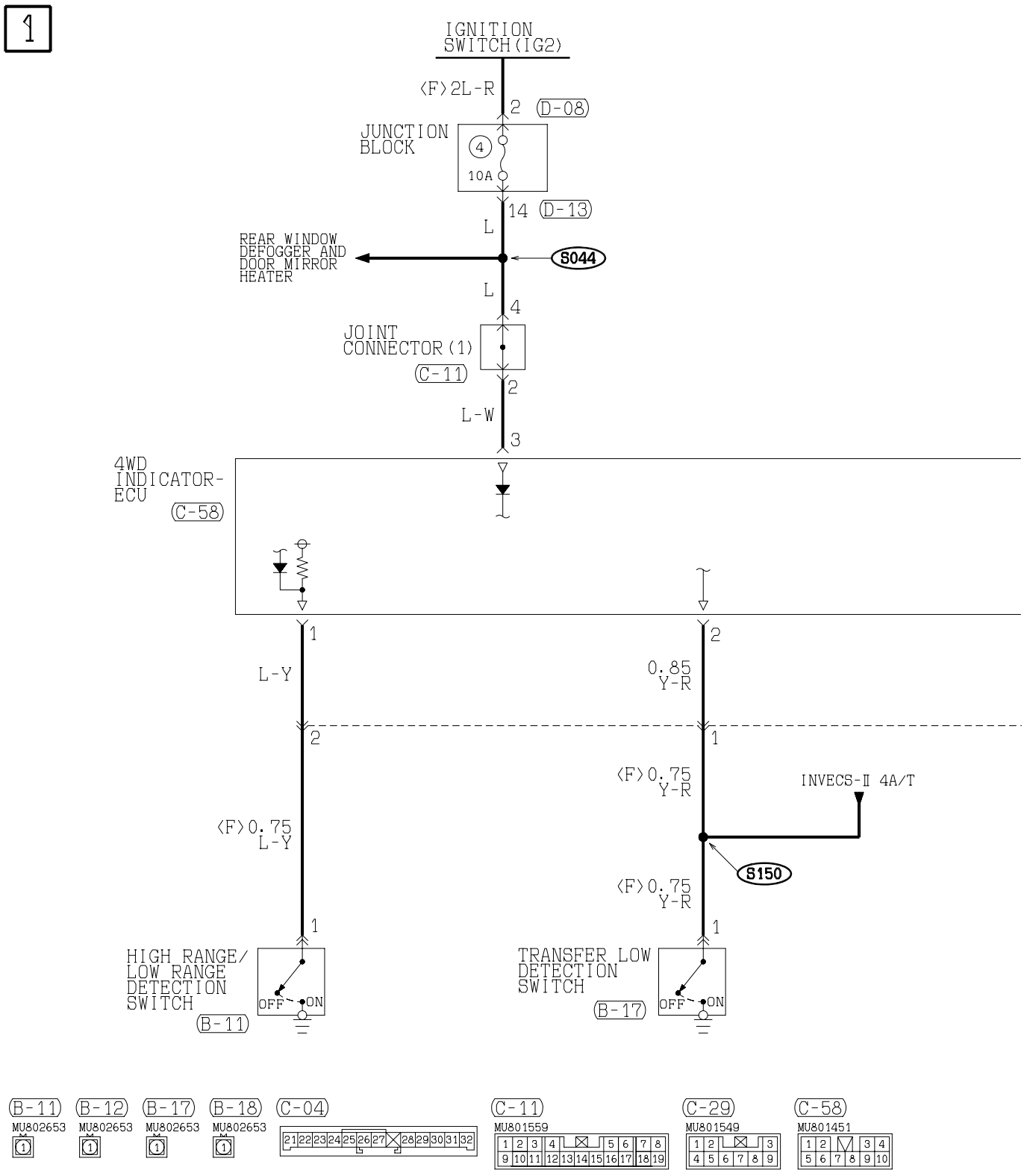

H3P15M06AA

TSB Revision

2

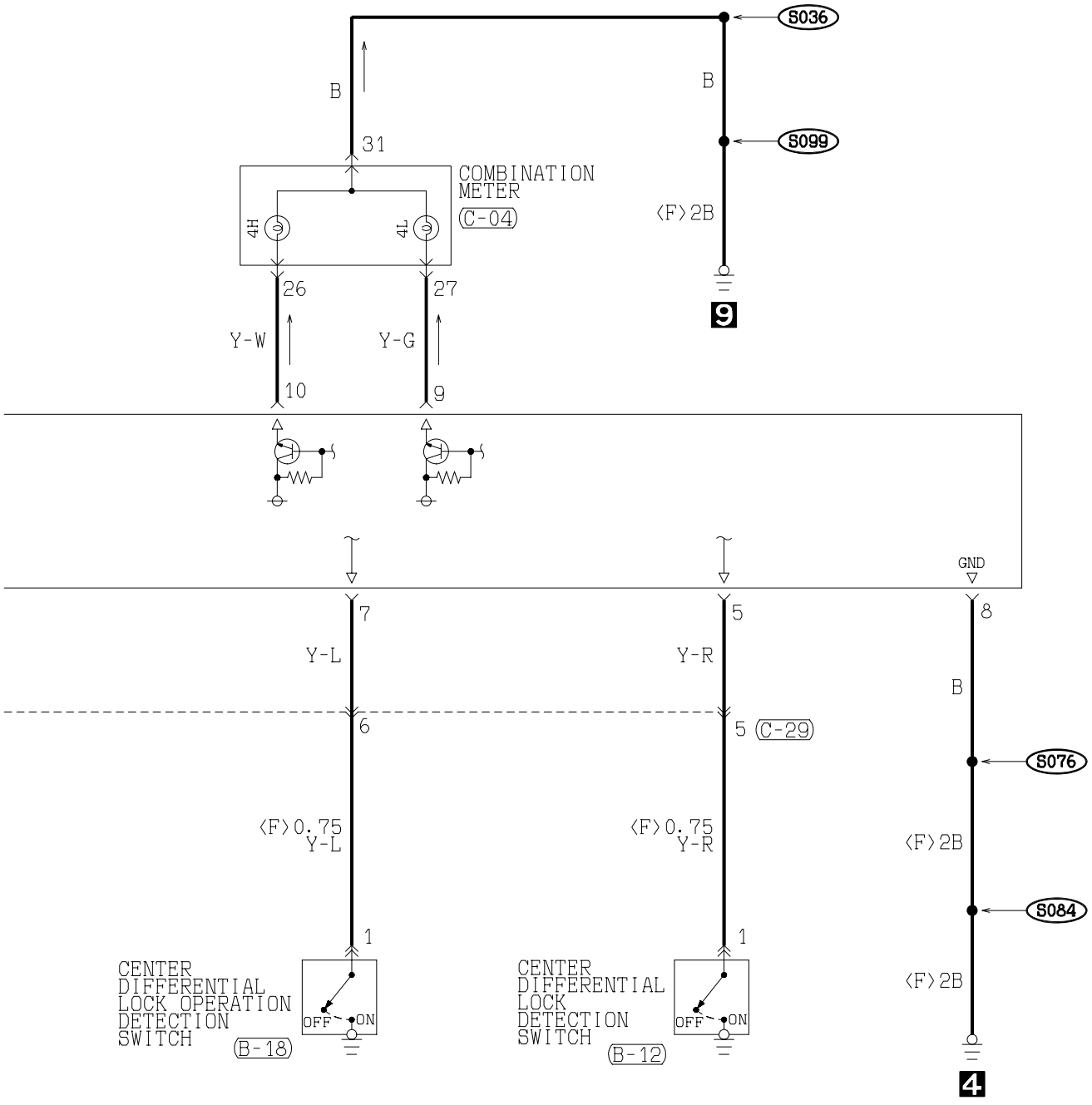

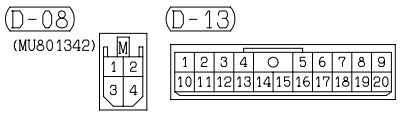

WIRE COLOR CODE

B :BLACK	LG:LIGHT GREEN	G :GREEN	L :BLUE	W :WHITE	Y :YELLOW	SB:SKY BLUE
BR:BROWN	O :ORANGE	GR:GRAY	R :RED	P :PINK	V :VIOLET	

H3P15M06AB

TSB Revision

ANTI-LOCK BRAKING SYSTEM (ABS) <RWD>

M1901008400679

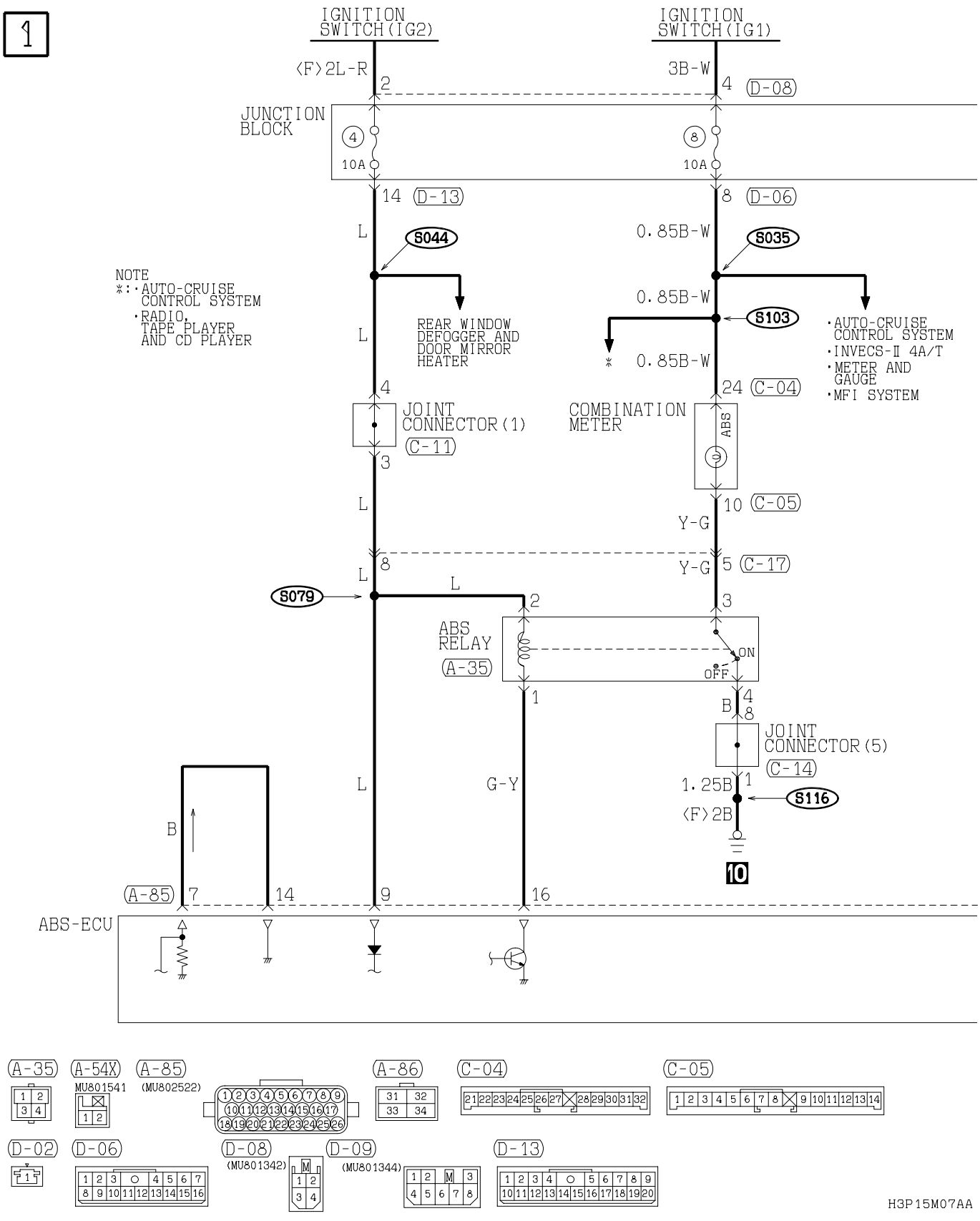

H3P15M07AA

TSB Revision

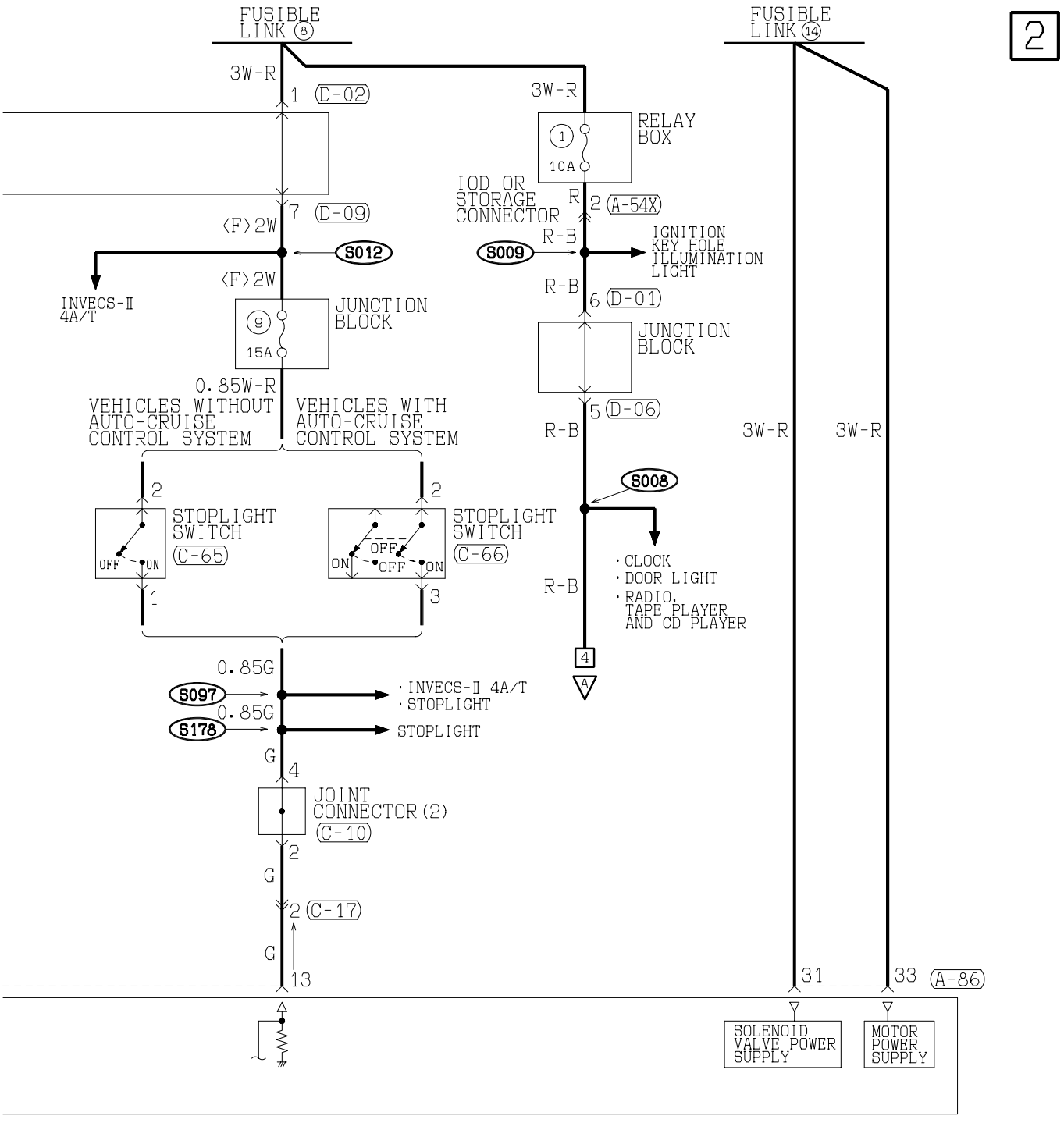

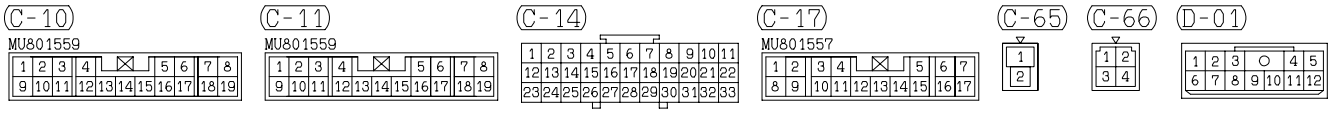

WIRE COLOR CODE

B :BLACK	BR:BROWN	G :GREEN	GR:GRAY	L :BLUE	LG:LIGHT GREEN	O :ORANGE	
P :PINK	R :RED	SB:SKY BLUE	V :VIOLET	W :WHITE	Y :YELLOW		

H3P15M07AB

TSB Revision

ANTI-LOCK BRAKING SYSTEM (ABS) <RWD> (CONTINUED)

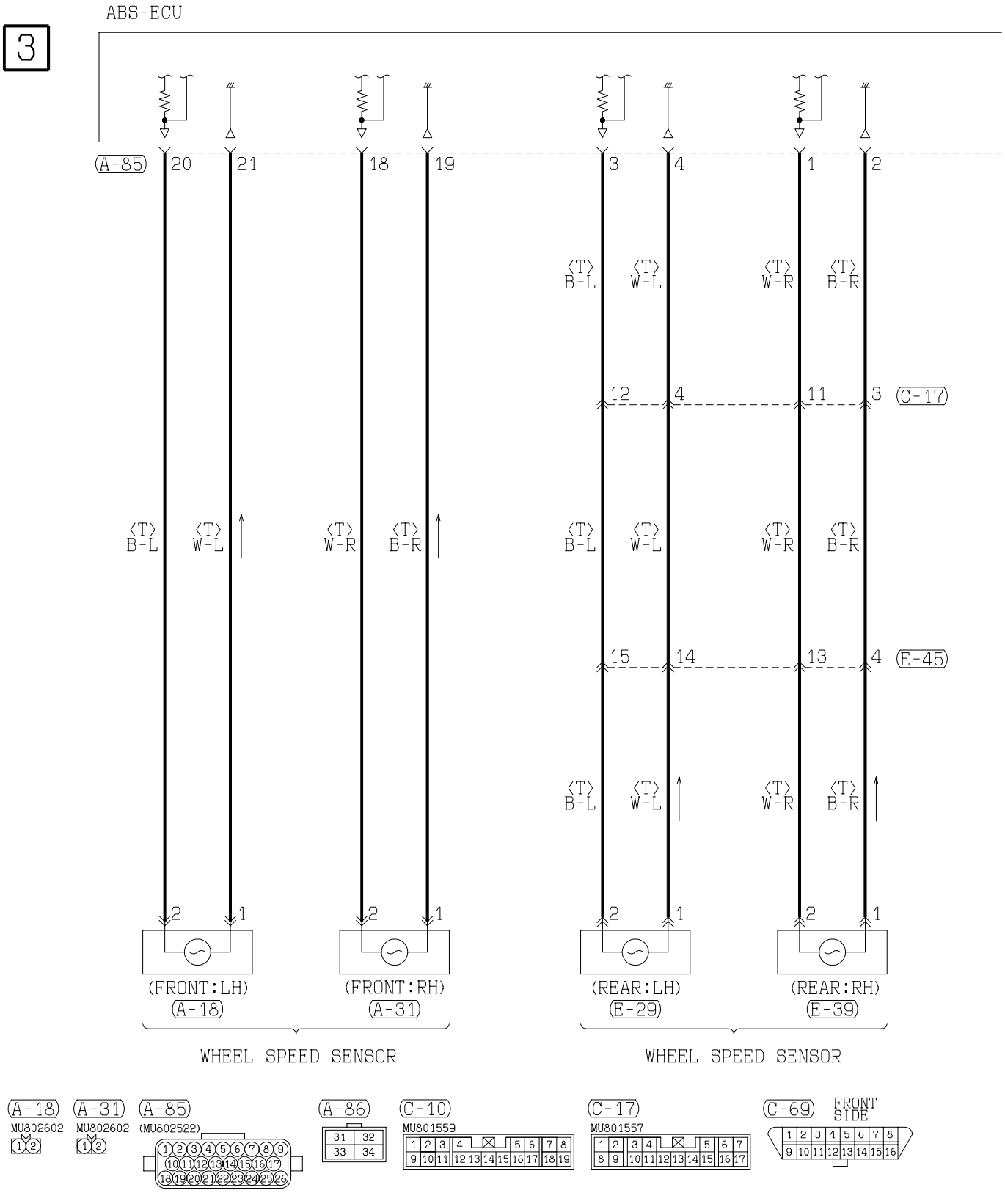

H3P15M07BA

TSB Revision

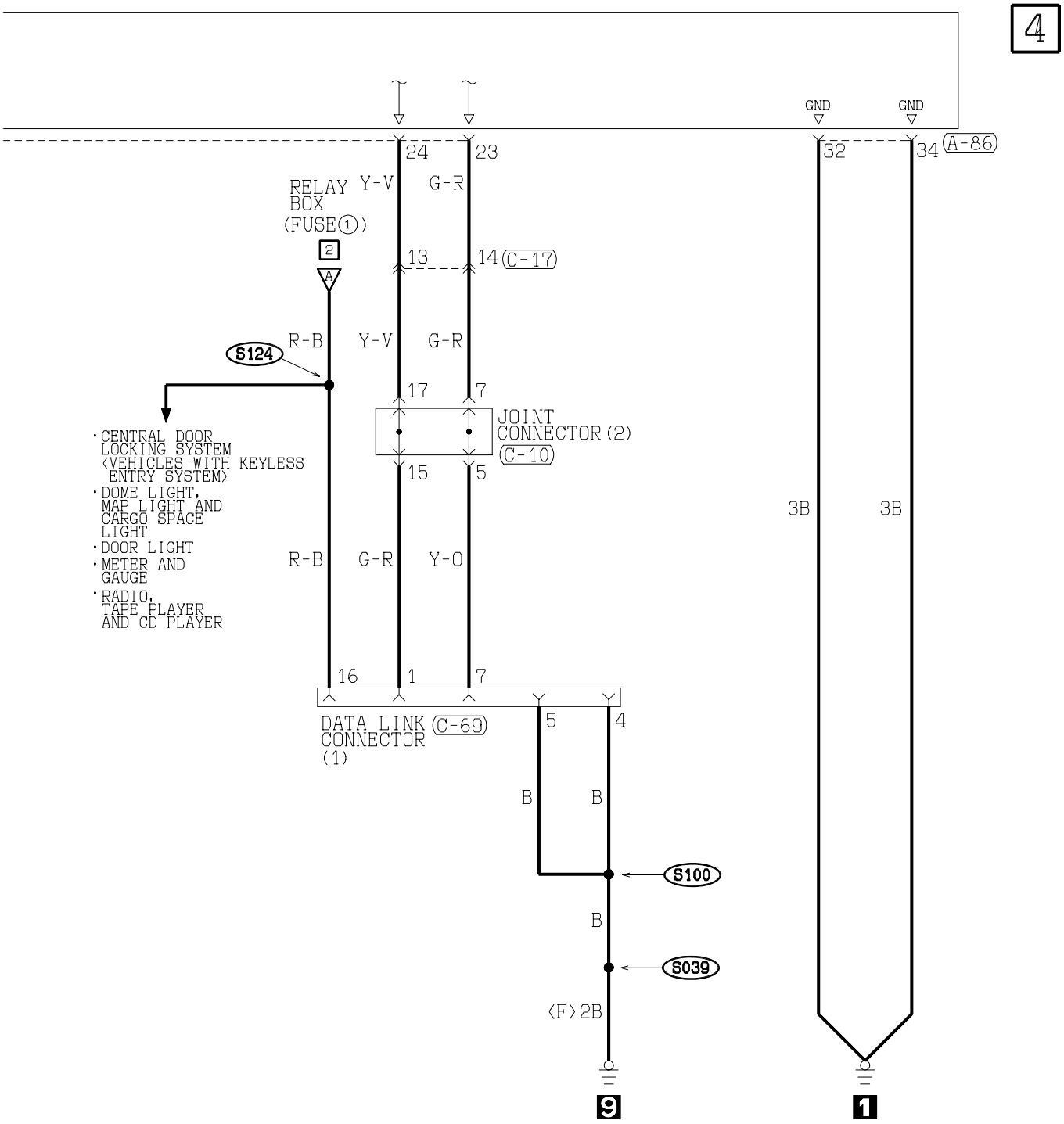

E-29 E-39 E-45

MU802601 MU802601

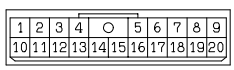

WIRE COLOR CODE

B :BLACK	BR:BROWN	G :GREEN	GR:GRAY	L :BLUE	LG:LIGHT GREEN	O :ORANGE	
P :PINK	R :RED	SB:SKY BLUE	V :VIOLET	W :WHITE	Y :YELLOW		

H3P15M07BB

TSB Revision

ANTI-LOCK BRAKING SYSTEM (ABS) <4WD>

M1901008400680

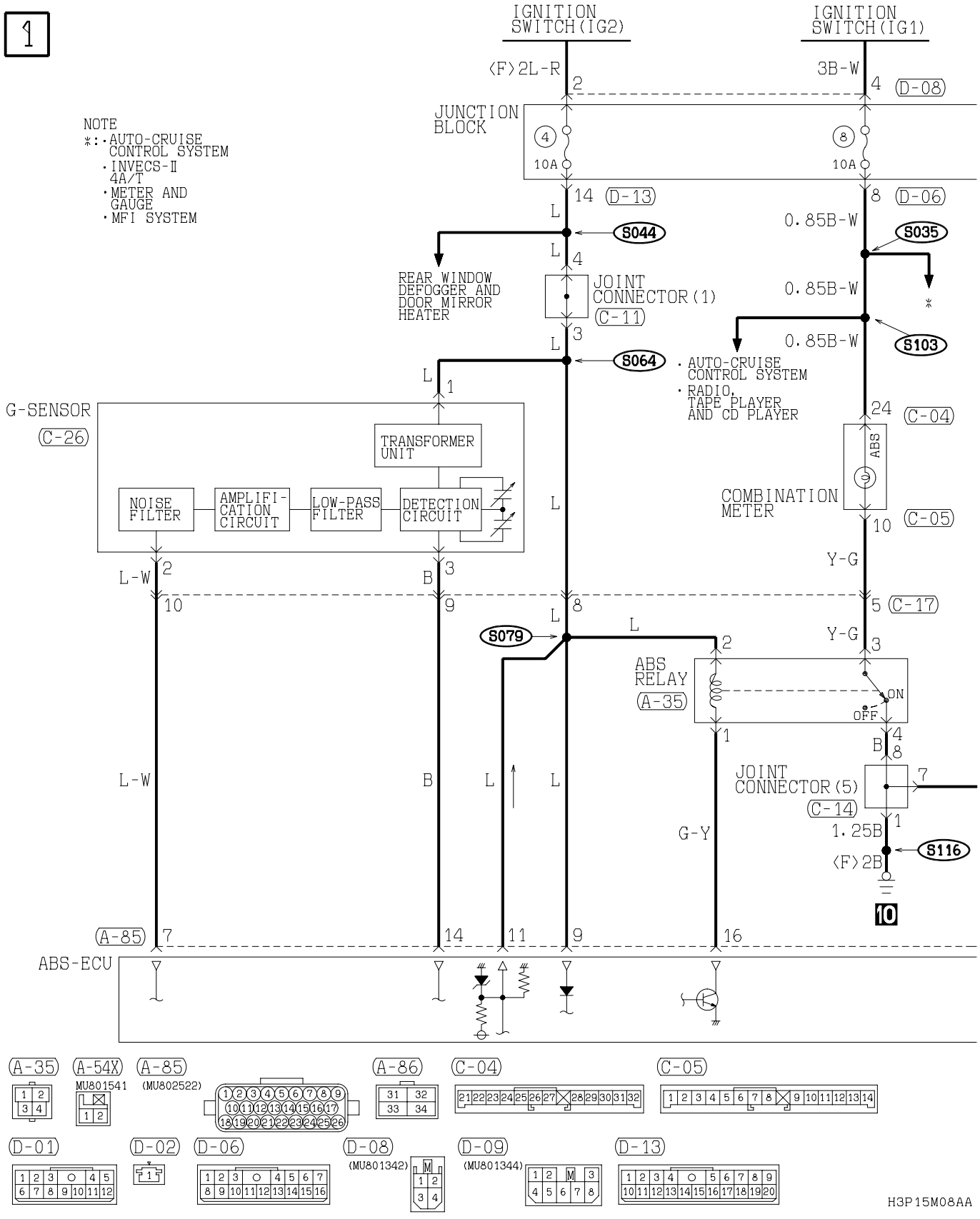

TSB Revision

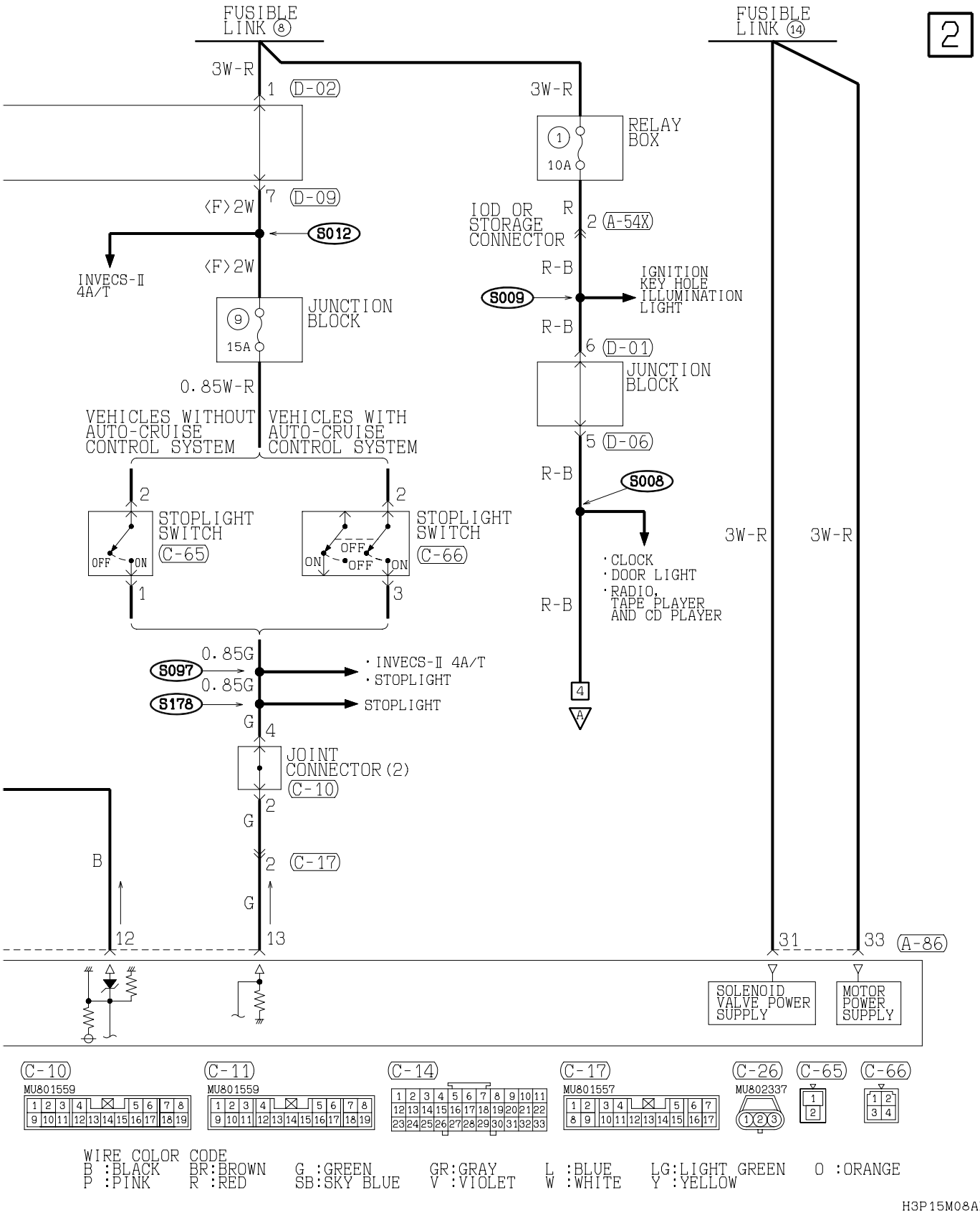

TSB Revision

ANTI-LOCK BRAKING SYSTEM (ABS) <4WD> (CONTINUED)

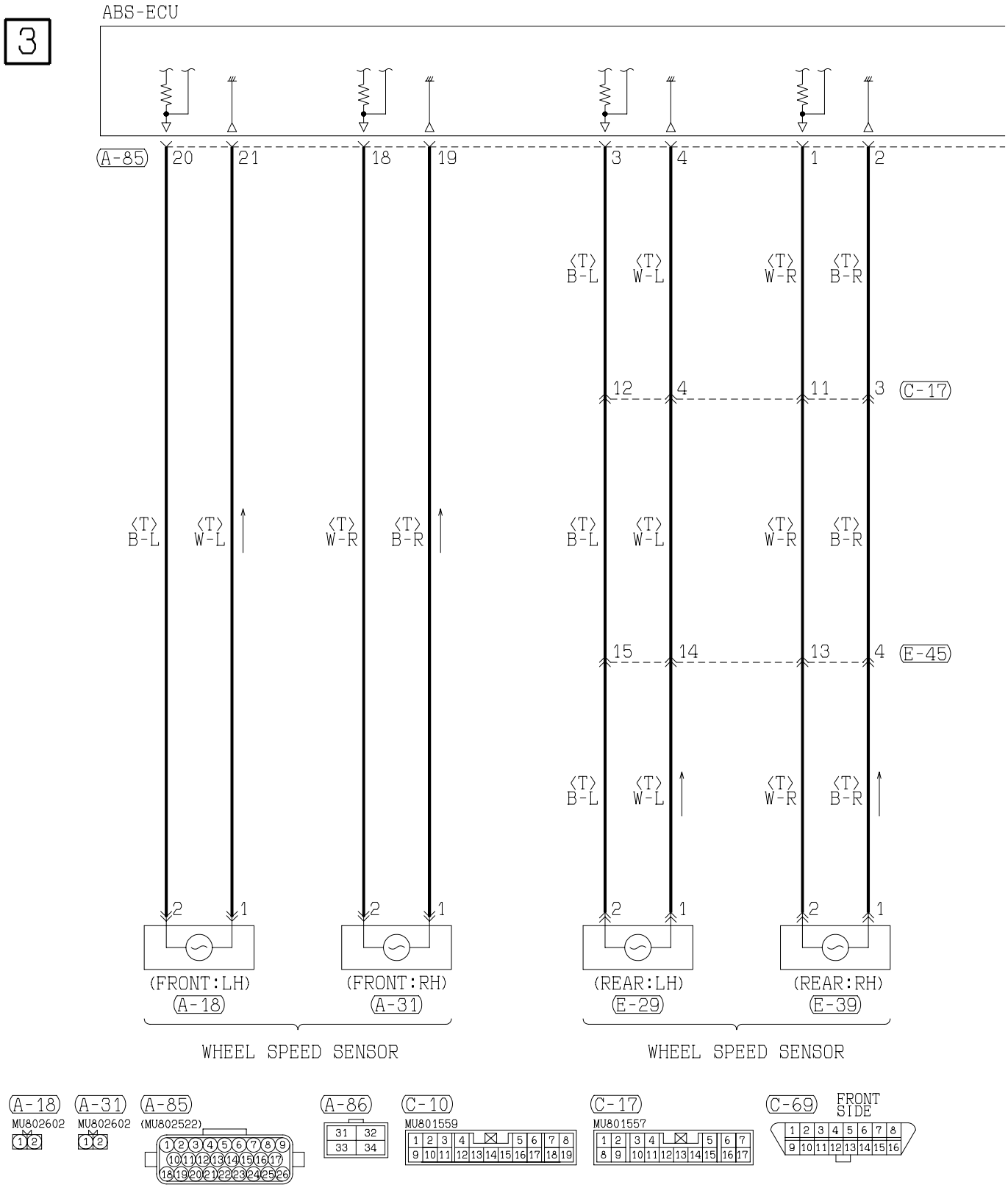

H3P15M08BA

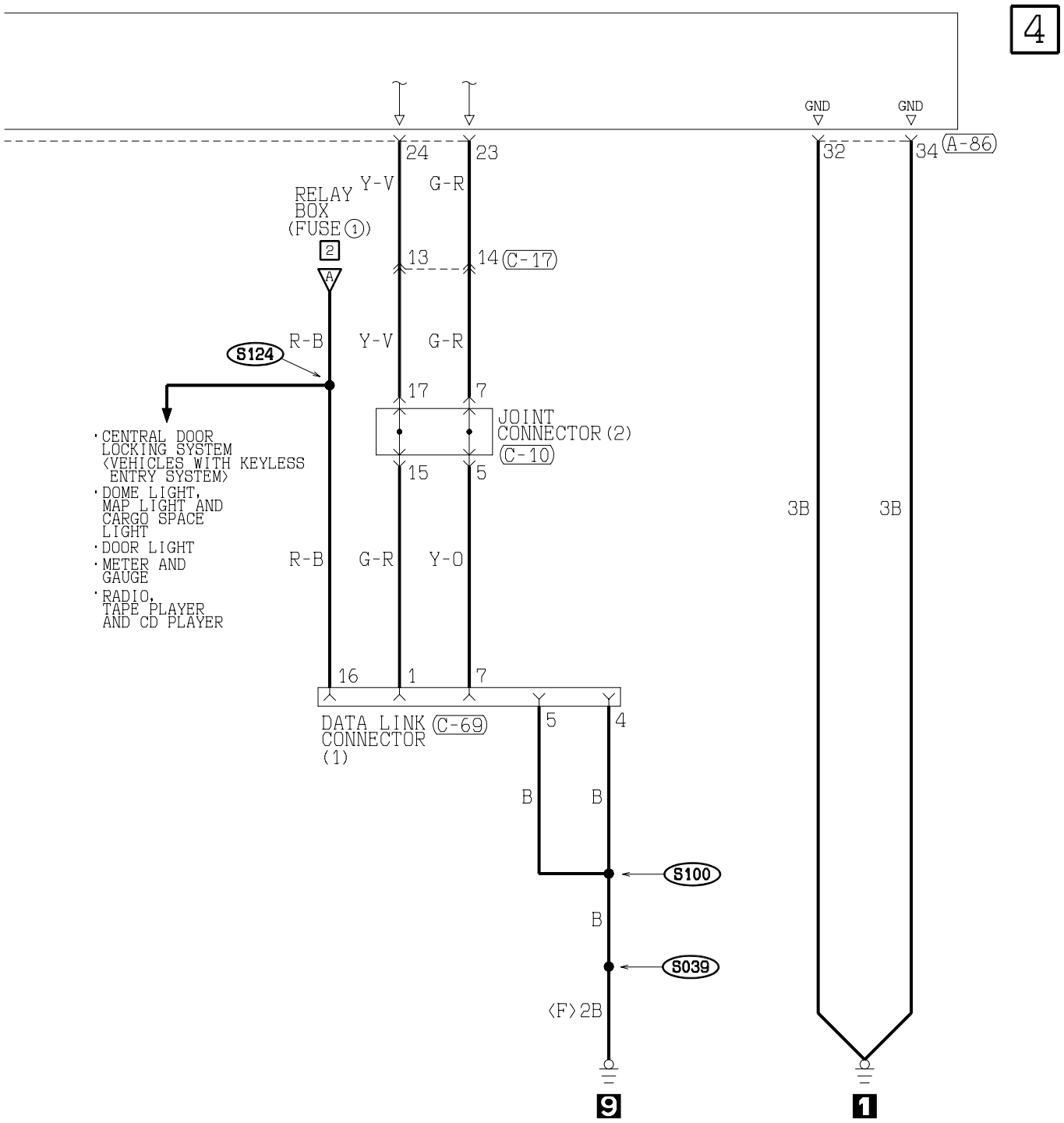

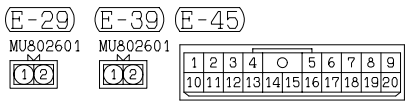

WIRE COLOR CODE

B	:BLACK	BR	:BROWN	G	:GREEN	GR	:GRAY	L	:BLUE
LG	:LIGHT GREEN	O	:ORANGE	P	:PINK	R	:RED	SB	:SKY BLUE
V	:VIOLET	W	:WHITE	Y	:YELLOW				

H3P15M08BB

SUPPLEMENTAL RESTRAINT SYSTEM (SRS)

M1901009700640

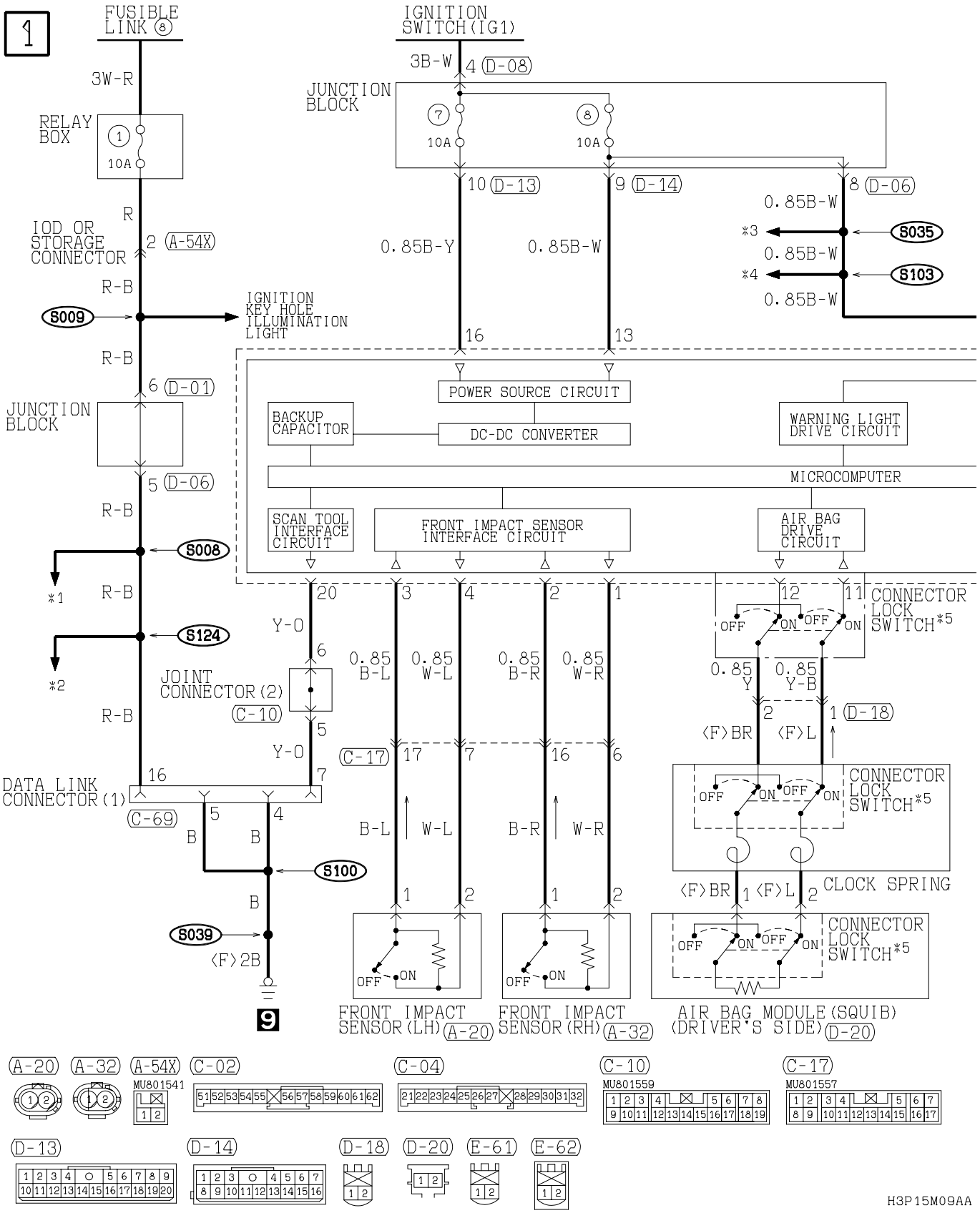

TSB Revision

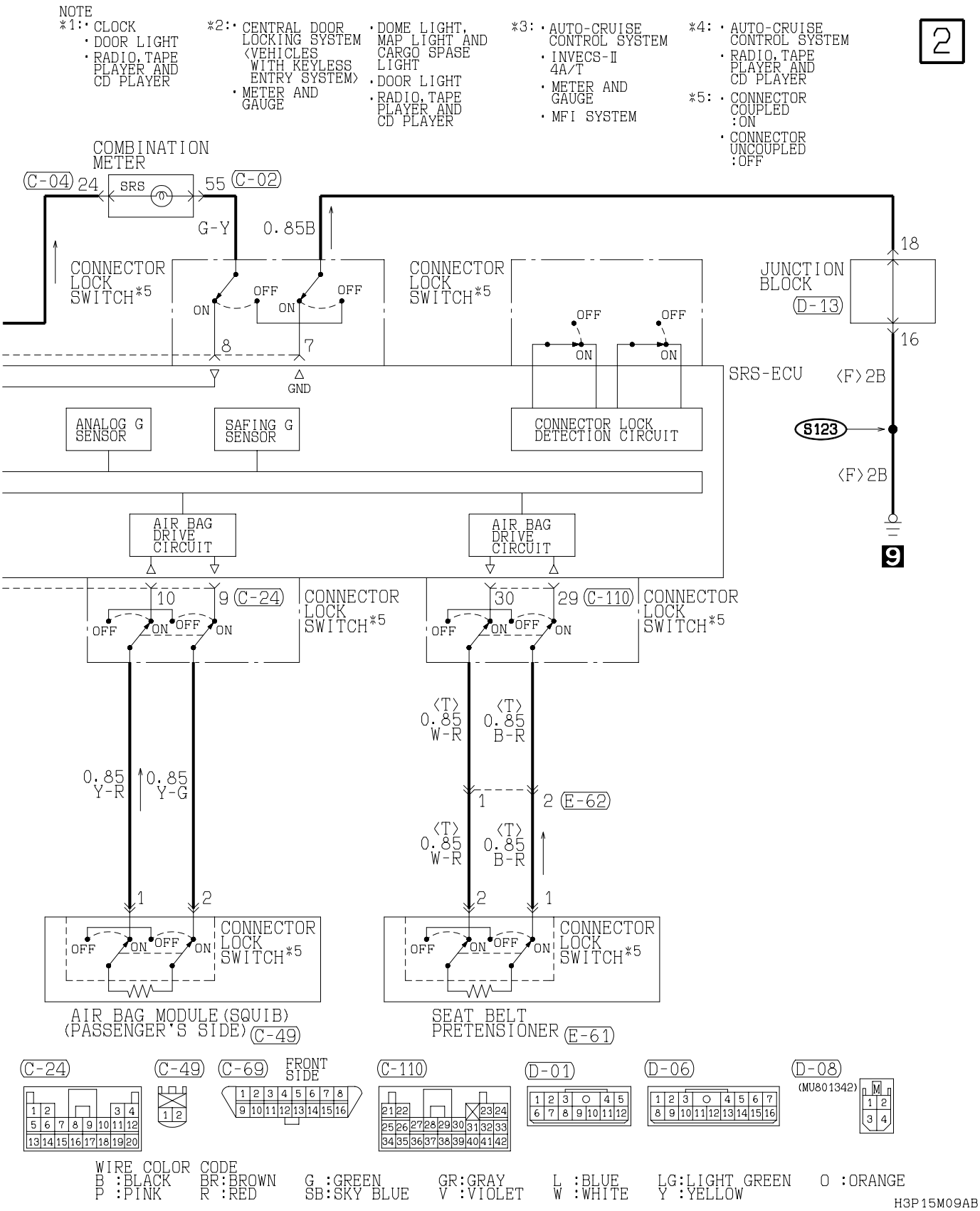

TSB Revision

HEATED SEAT

M1901010700149

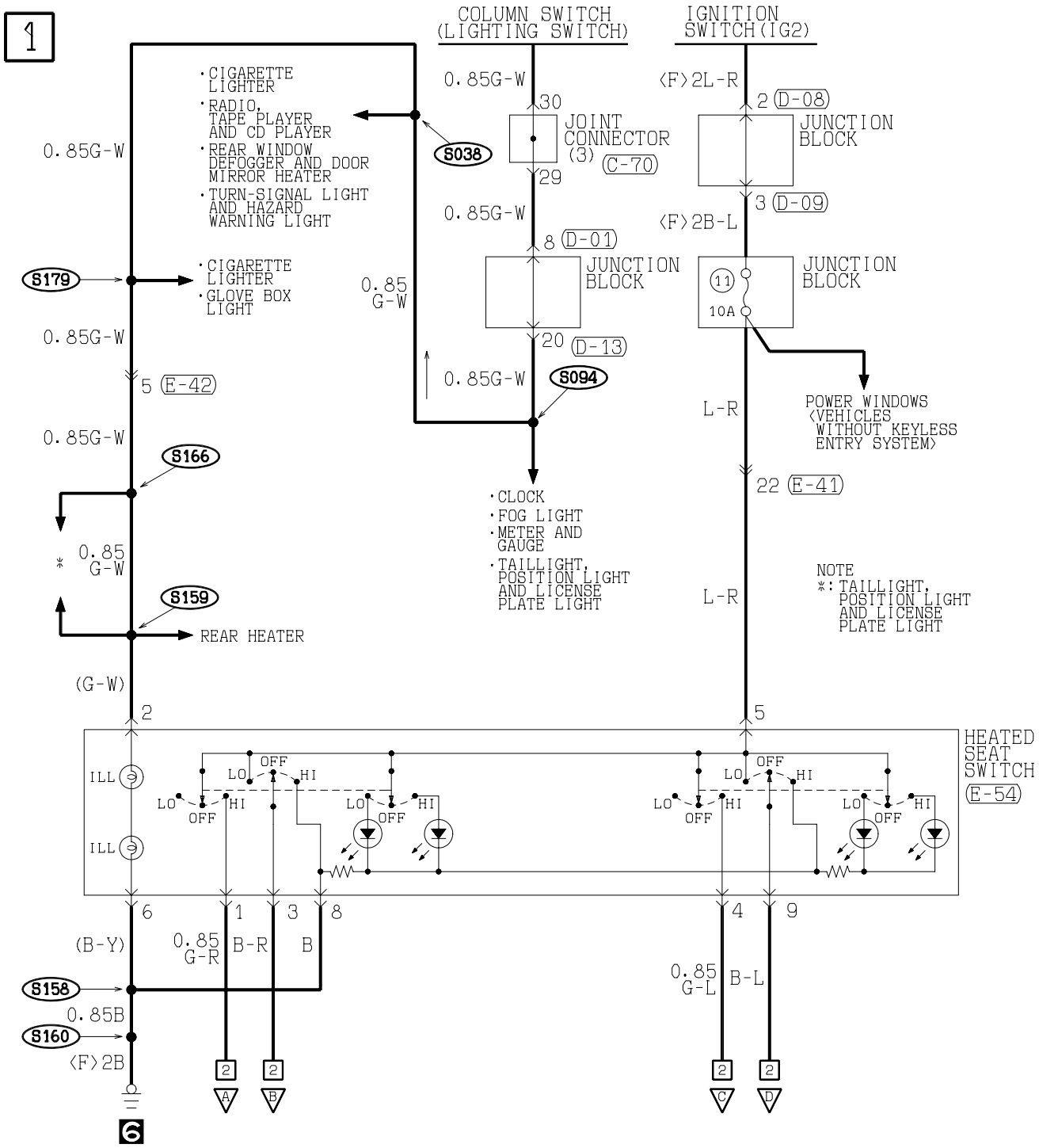

H3P15M10AA

TSB Revision

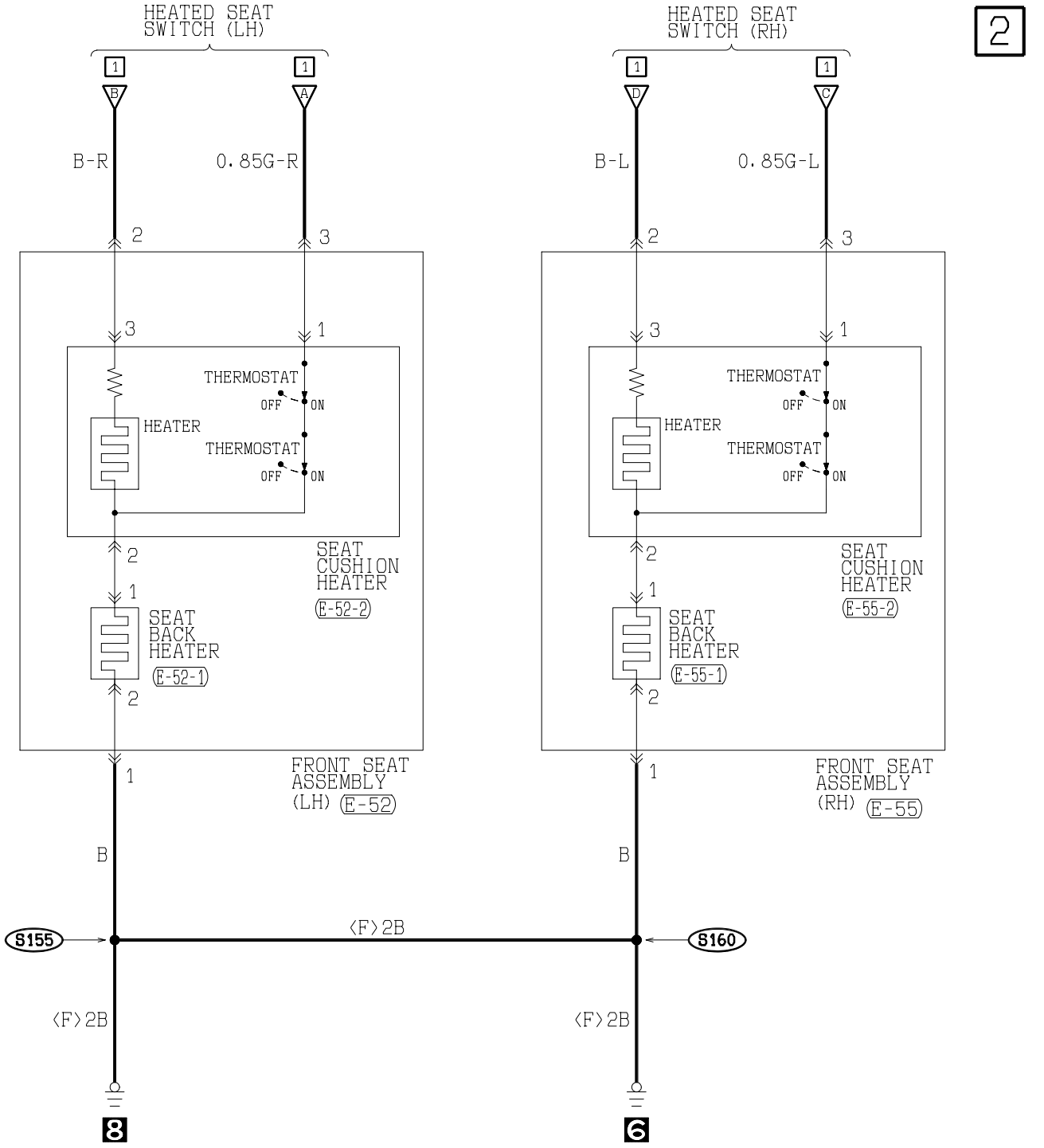

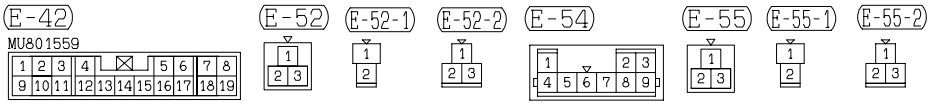

WIRE COLOR CODE

B :BLACK	BR:BROWN	G :GREEN	GR:GRAY	L :BLUE	LG:LIGHT GREEN	O :ORANGE	
P :PINK	R :RED	SB:SKY BLUE	V :VIOLET	W :WHITE	Y :YELLOW		

H3P15M10AB

TSB Revision

THEFT-ALARM SYSTEM

M1901012400371

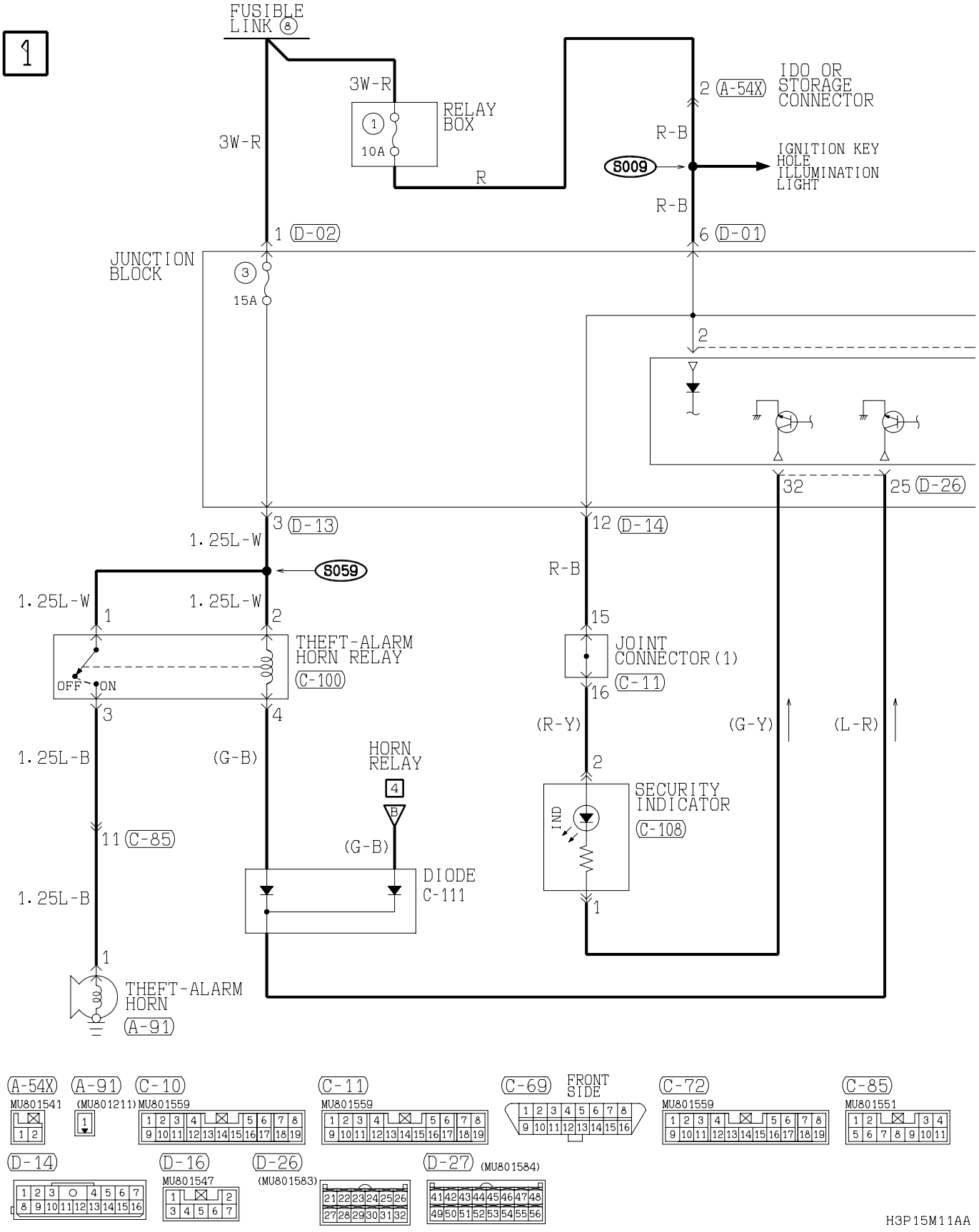

H3P15M11AA

TSB Revision

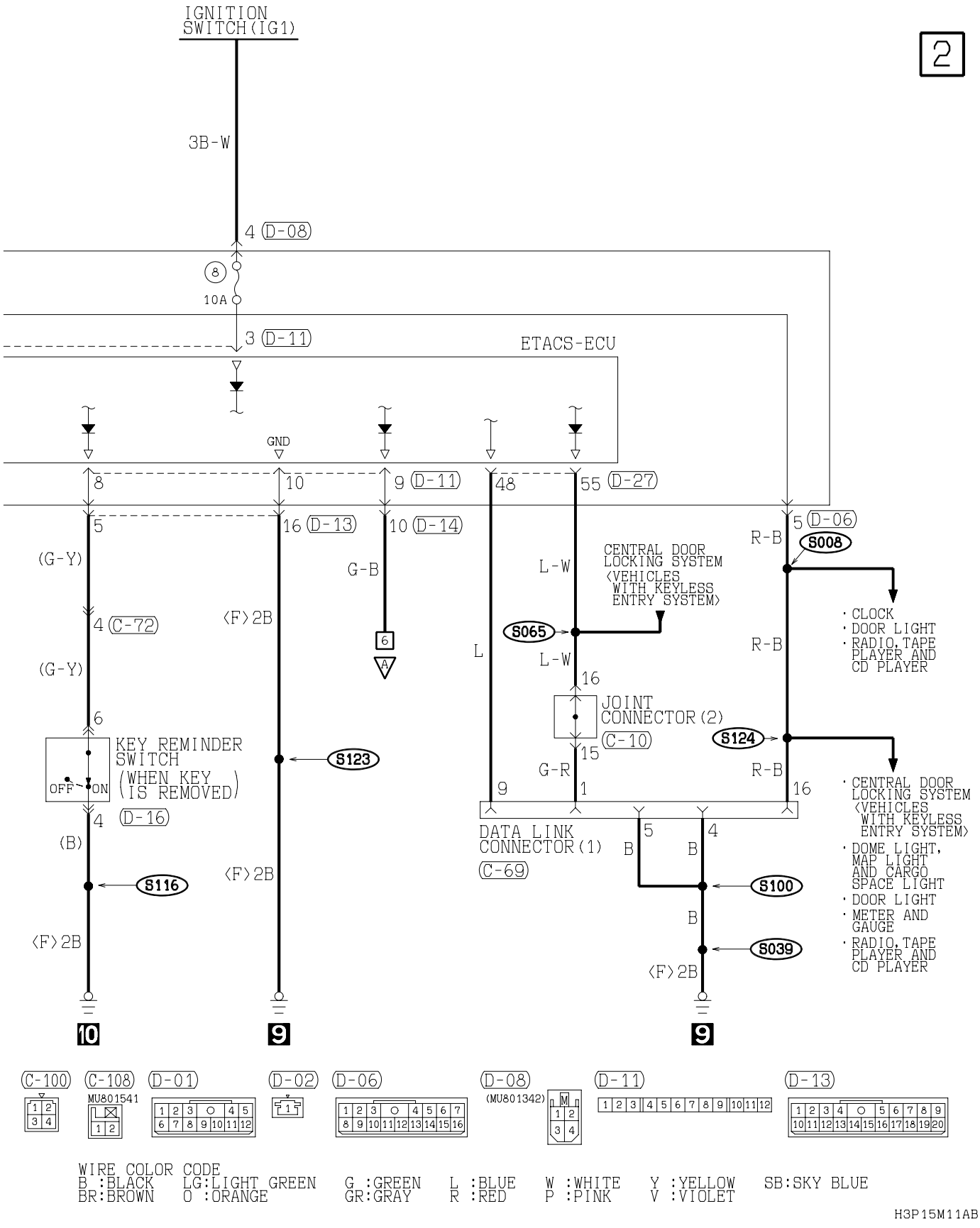

TSB Revision

THEFT-ALARM SYSTEM (CONTINUED)

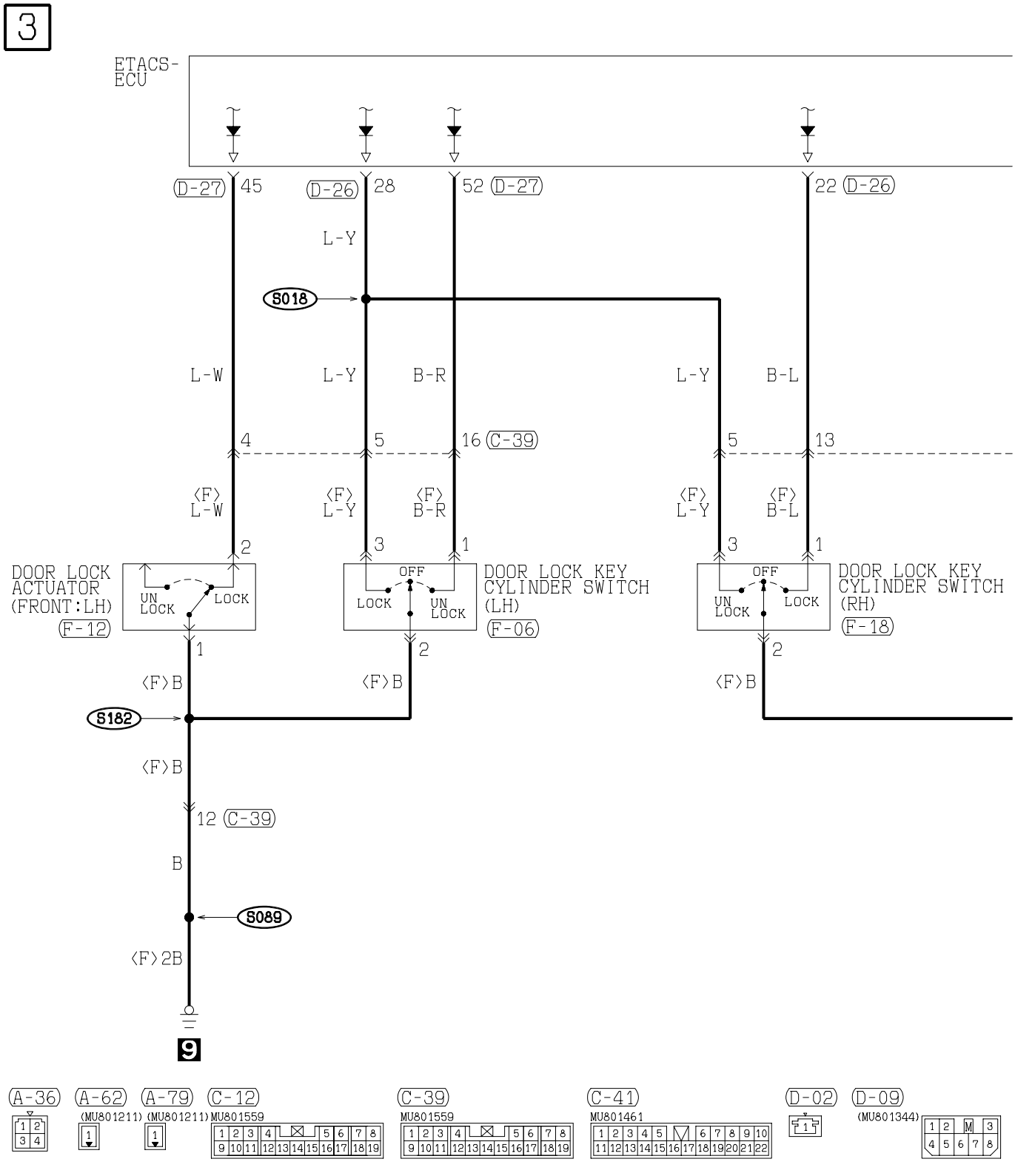

H3P15M11BA

TSB Revision

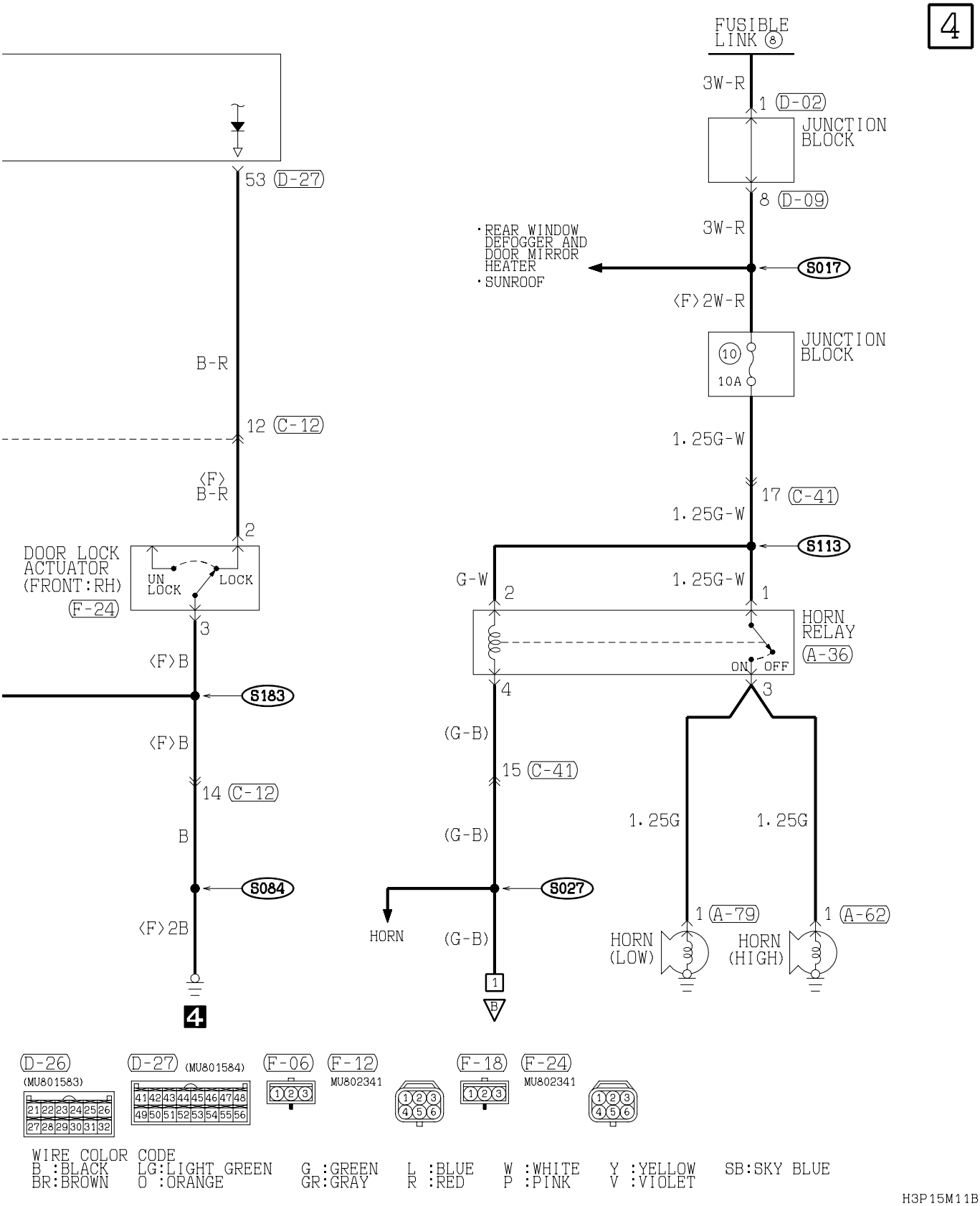

TSB Revision

THEFT-ALARM SYSTEM (CONTINUED)

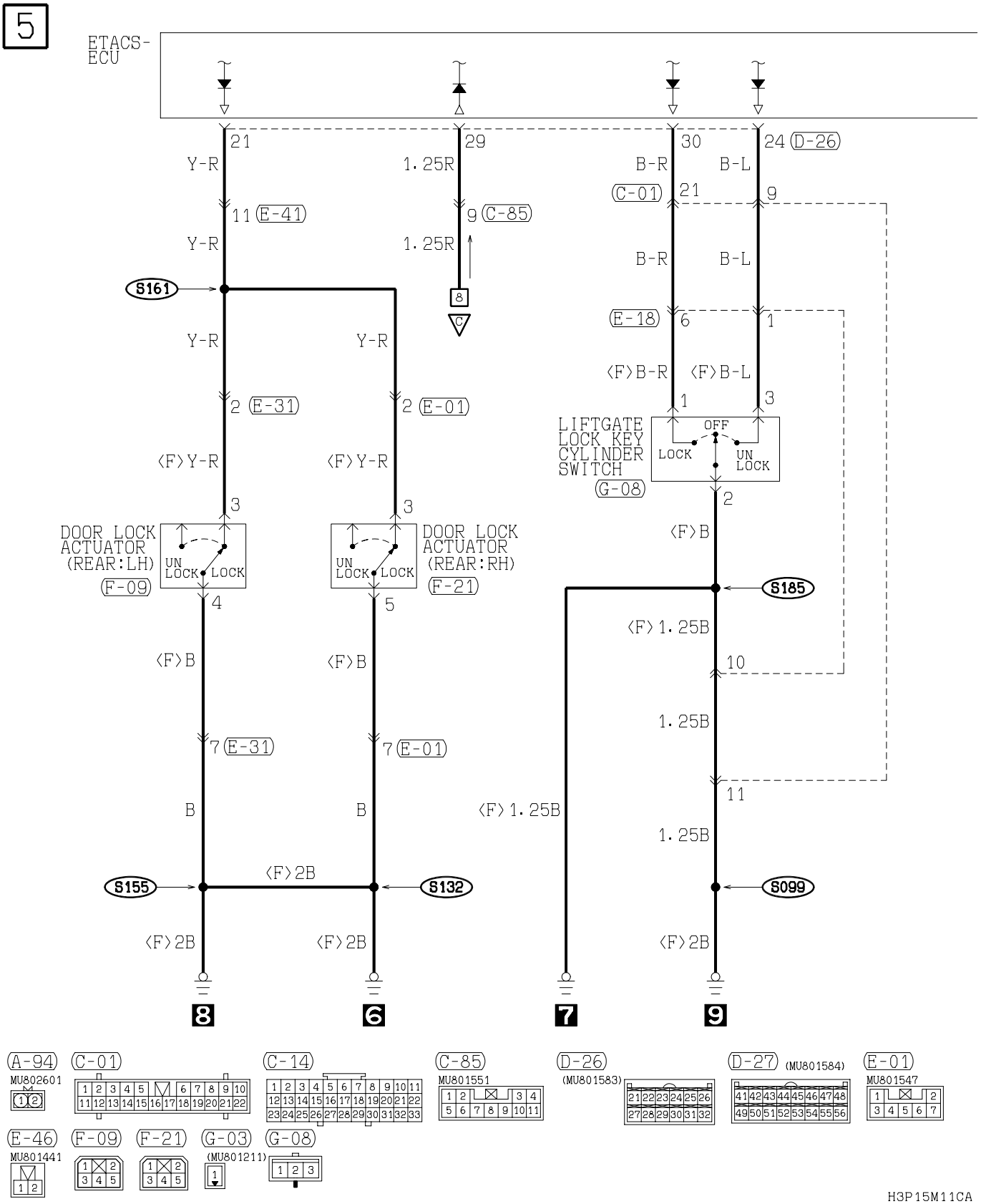

H3P15M11CA

TSB Revision

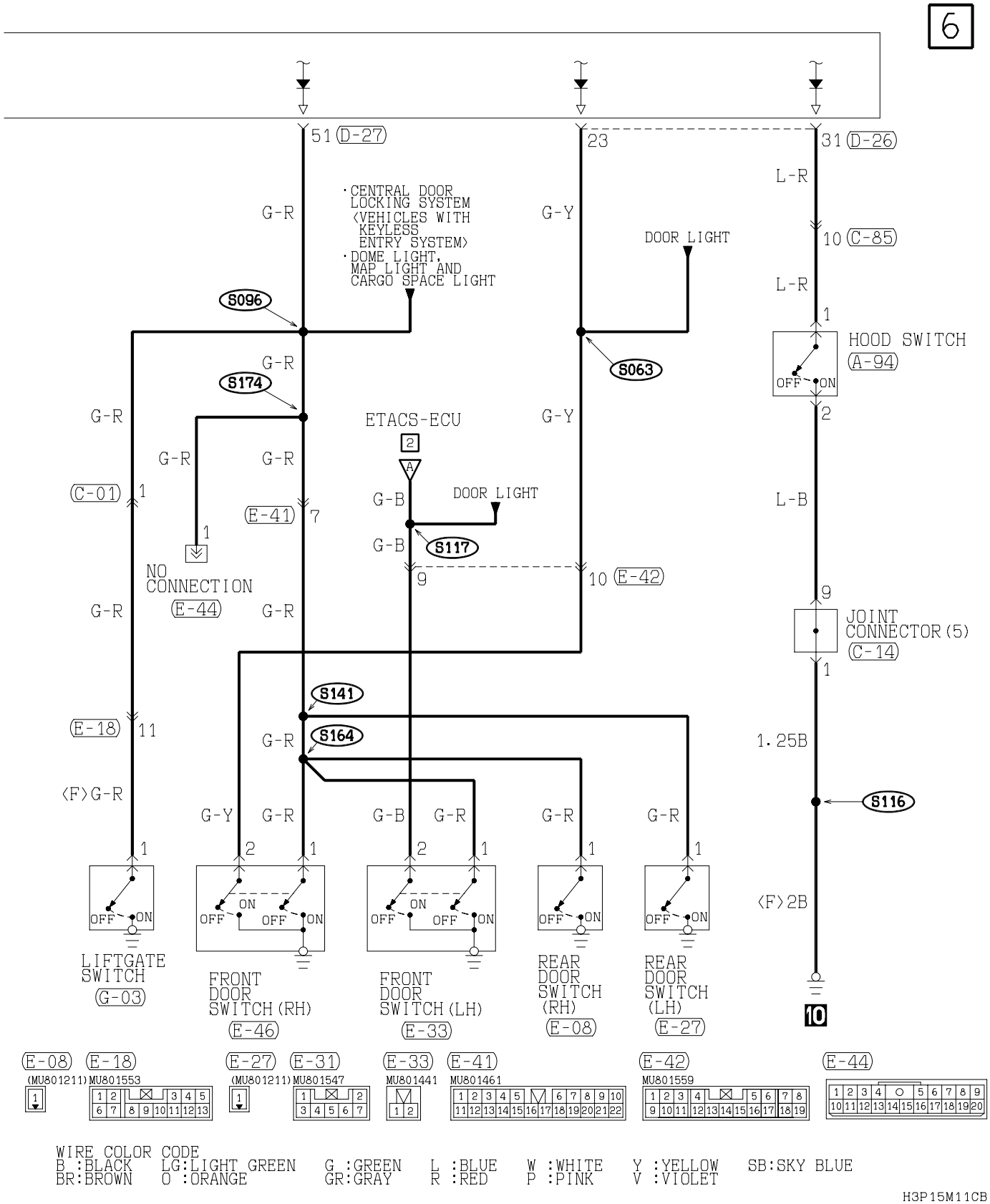

TSB Revision

THEFT-ALARM SYSTEM (CONTINUED)

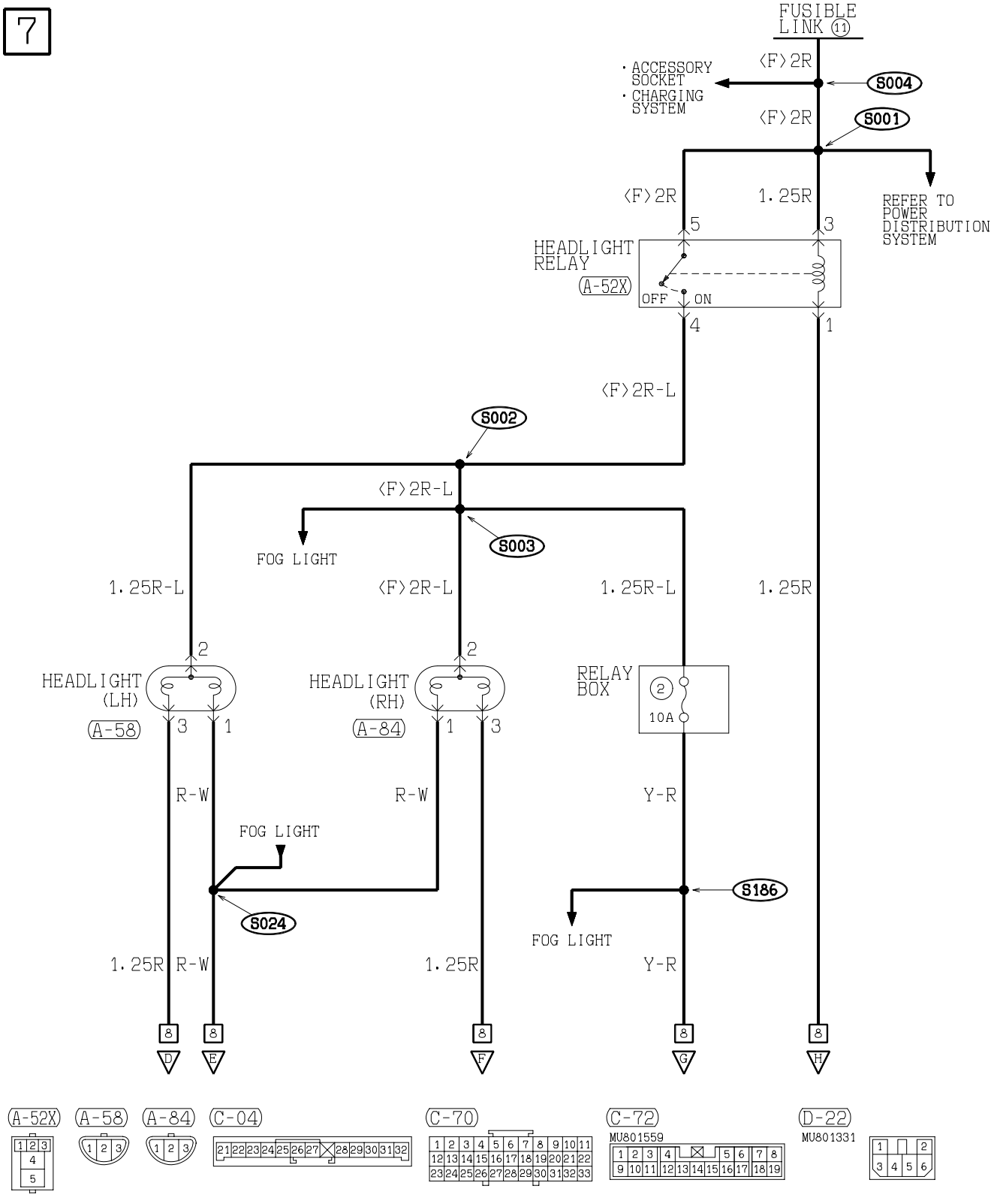

H3P15M11DA

TSB Revision

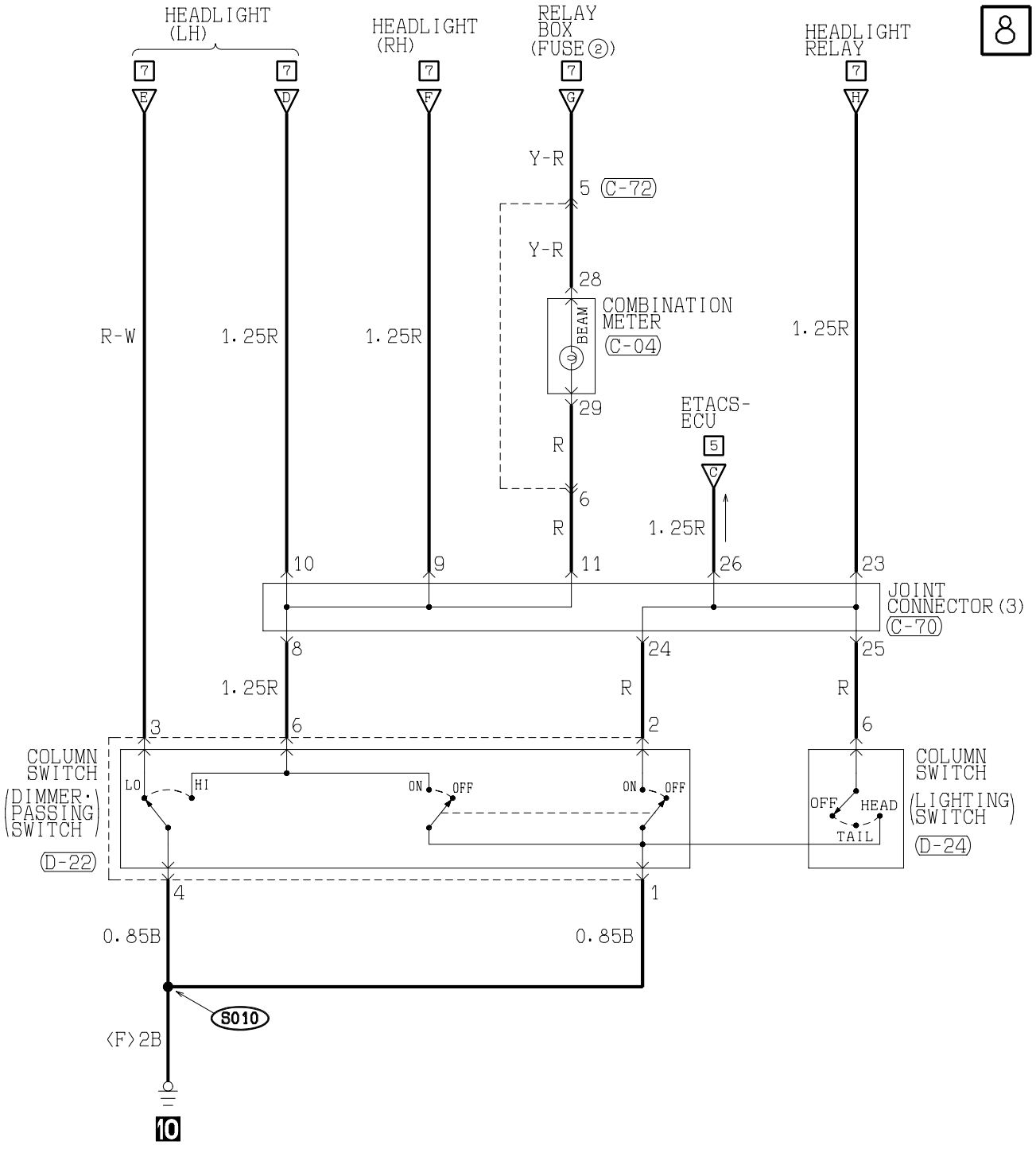

D-24

MU801451

1	2						3	4	
5	6	7	8	9	10				

WIRE COLOR CODE

B :BLACK	BR:BROWN	G :GREEN	GR:GRAY	L :BLUE	LG:LIGHT GREEN	O :ORANGE
P :PINK	R :RED	SB:SKY BLUE	V :VIOLET	W :WHITE	Y :YELLOW	

H3P15M11DB

TSB Revision

IMMOBILIZER SYSTEM

M1901013600743

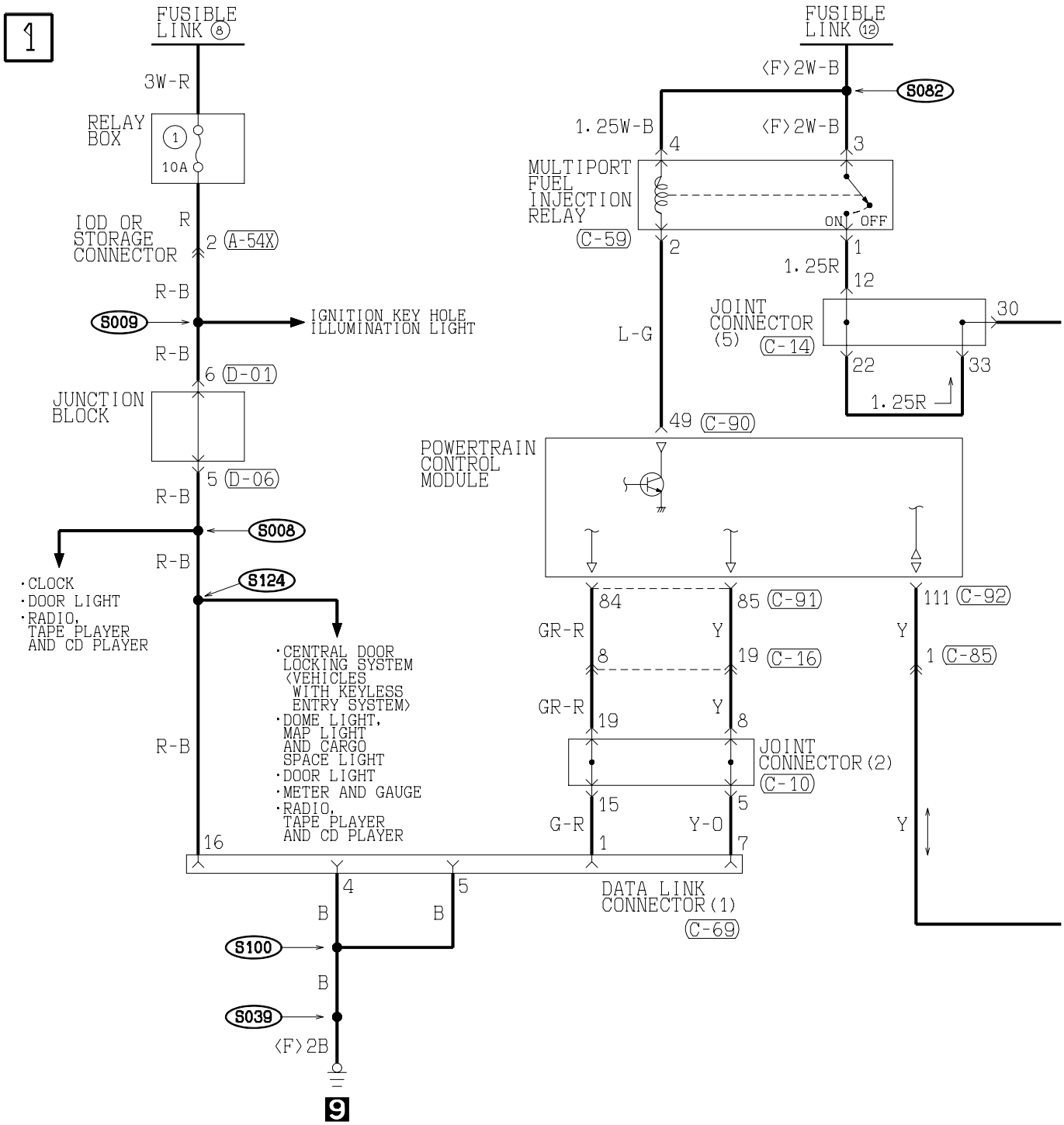

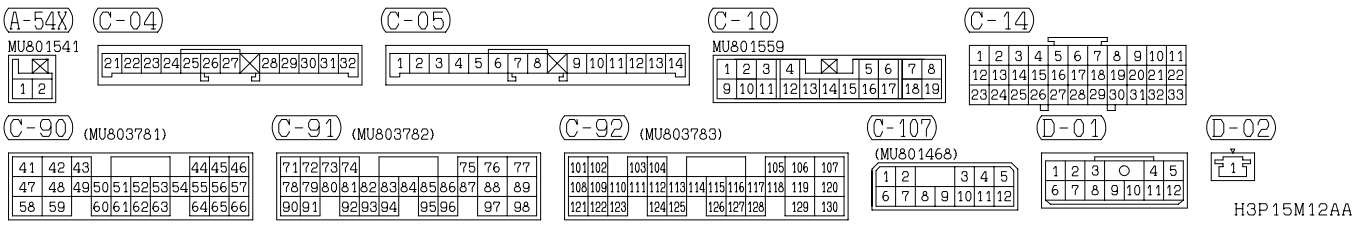

TSB Revision

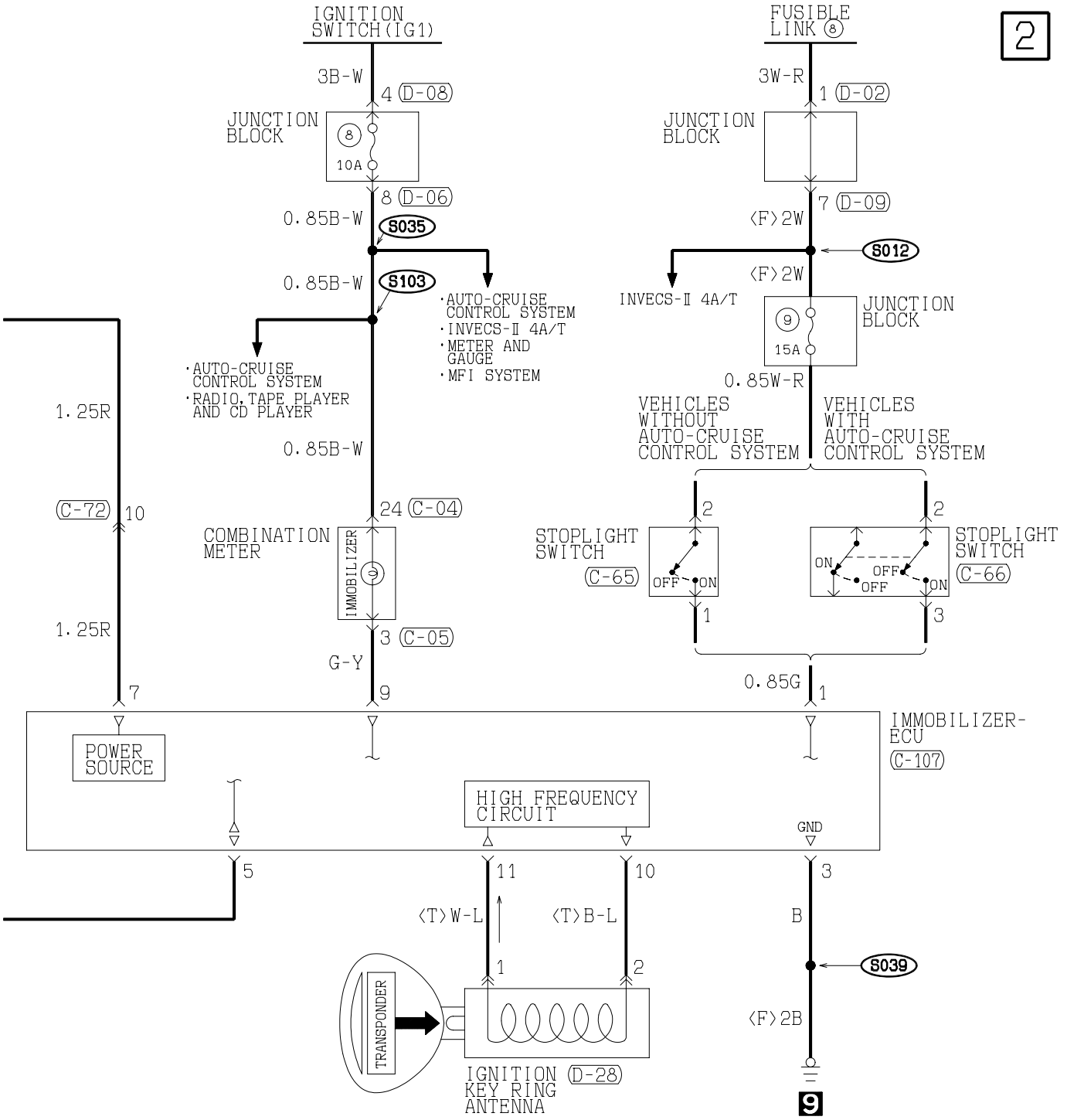

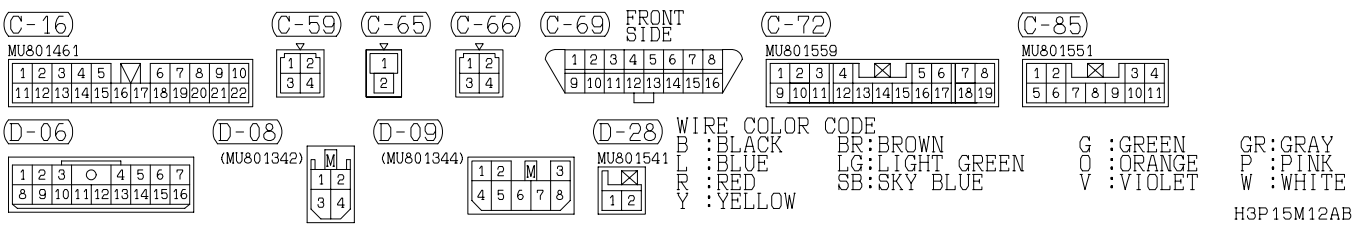

TSB Revision

NOTES